US005543753A

United States Patent [19]

Williamson

[11] Patent Number: 5,543,753

[45] Date of Patent: Aug. 6, 1996

[54] **AUDIO FREQUENCY POWER AMPLIFIERS WITH ACTIVELY DAMPED FILTER**

[75] Inventor: **Robert C. Williamson**, Everett, Wash.

[73] Assignee: **Carver Corporation**, Lynnwood, Wash.

[21] Appl. No.: **263,462**

[22] Filed: **Jun. 22, 1994**

[51] **Int. Cl.**[6] **H02J 1/02**

[52] **U.S. Cl.** **330/297**; 363/39

[58] **Field of Search** 330/10, 202, 297, 330/303, 306; 363/39, 74

[56] **References Cited**

U.S. PATENT DOCUMENTS

2,776,382	1/1957	Jensen	307/97
3,142,807	7/1964	Sharma	330/15
3,268,826	9/1962	Harrison et al.	330/13
3,319,175	5/1967	Dryden	330/22
3,426,290	2/1969	Jensen	330/40
3,483,425	12/1969	Yanishevsky	315/18
3,542,953	11/1970	Munch, Jr.	179/1
3,585,517	6/1971	Herbert	330/10
3,596,172	7/1971	Harrison	323/45
3,832,643	8/1974	Van Heyningen et al.	330/15
3,961,280	6/1976	Sampei	330/40
4,015,213	3/1977	Hamada	330/10
4,048,573	9/1977	Evans et al.	330/2
4,054,843	10/1977	Hamada	330/263
4,087,759	5/1978	Iwamatsu	330/262
4,092,610	5/1978	White et al.	330/207
4,115,739	9/1978	Sano et al.	330/263
4,217,632	8/1980	Bardos et al.	363/26
4,218,660	8/1980	Carver	330/297
4,409,559	10/1983	Amada et al.	330/295
4,472,687	9/1984	Kashiwagi et al.	330/297
4,484,145	11/1984	Haulin	330/9
4,484,150	11/1984	Carver	330/297
4,507,619	3/1985	Dijkstra et al.	330/297
4,808,946	2/1989	Carver et al.	330/297
4,937,719	6/1990	Yamada et al.	363/39
5,075,634	12/1991	French	330/146
5,200,711	4/1993	Andersson et al.	330/267
5,347,230	9/1994	Noro	330/297

FOREIGN PATENT DOCUMENTS

2552600	3/1985	France	H03F 3/21
1918618	10/1970	Germany	H03F 3/26
2407629	8/1975	Germany	H03F 3/66
2542171	4/1976	Germany	H03F 3/217
49-118261	4/1976	Japan	H03F 1/02
52-4757	1/1977	Japan	H03F 3/20
51-35531	10/1977	Japan	H03F 3/20
51-35530	10/1977	Japan	H03F 3/20
53-94162	8/1978	Japan	H03F 3/217
56-58303	5/1981	Japan	H03F 11/02
56-89105	7/1981	Japan	H03F 11/02
57-23310A	2/1982	Japan	H03F 3/217
57-140008A	8/1982	Japan	H03F 3/21
58-14606A	1/1983	Japan	H03F 1/02
58-105606A	6/1983	Japan	H03F 1/02
58-119209	7/1983	Japan	H03F 1/02
59-17710A	1/1984	Japan	H03F 3/20
1-147907A	6/1989	Japan	H03F 1/02
559362	7/1977	U.S.S.R.	H03F 3/20

OTHER PUBLICATIONS

"Band Pass Current Control", by Allen F. Rozman and Jeffrey J. Boylan, APEC 94 vol. 2 (pp. 631–637), 1994 IEEE.

"Output Impedance Considerations for Switching Regulators with Current–Injected Control", by Schoneman and Mitchell, IEEE Transactions on Power Electronics, vol. 4, No. 1, Jan. 1989.

Primary Examiner—Steven Mottola

Attorney, Agent, or Firm—Hughes, Multer and Schacht, P.S.

[57] **ABSTRACT**

An inverter for an audio amplifier. The inverter comprises a current damping feedback loop for actively damping oscillations caused by an output inductor within the inverter. A forward compensator is provided to compensate for the frequency response of the actively damped filter. The resulting inverter generates an output voltage that tracks an input voltage thereof with improved frequency response within the frequency range of interest.

27 Claims, 11 Drawing Sheets

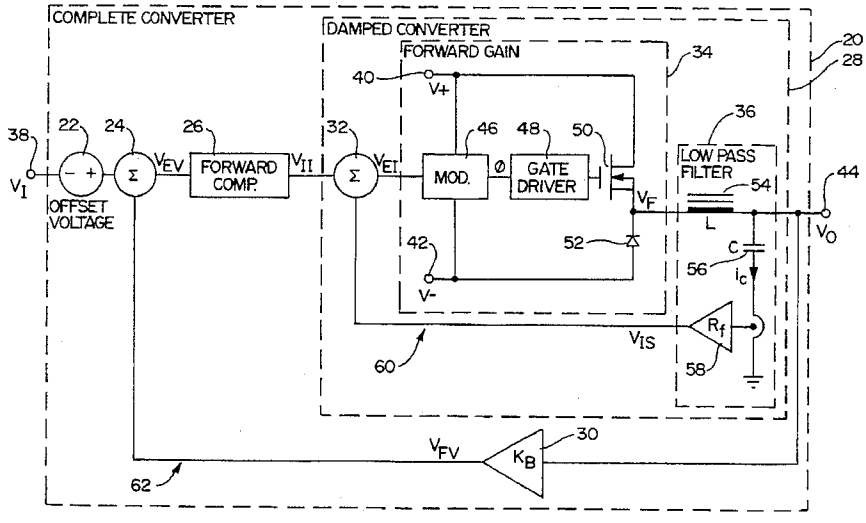

FIG. 1

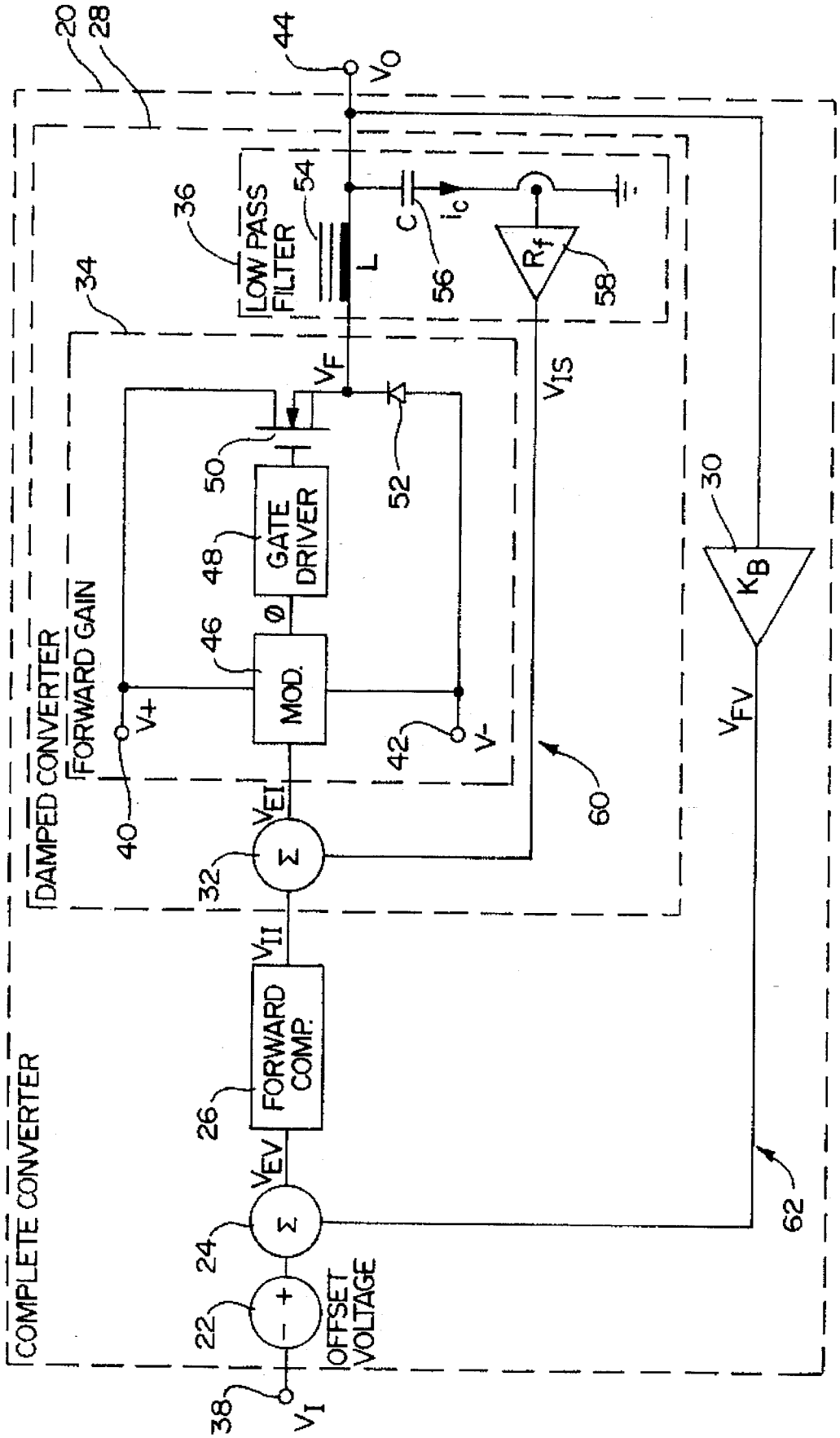
COMPLETE CONVERTER
DAMPED CONVERTER
FORWARD GAIN
LOW PASS FILTER
GATE DRIVER
MOD.
FORWARD COMP.
OFFSET VOLTAGE
V_I
V_{EV}
V_{II}
V_{EI}
V_F
V_{IS}
V_{FV}
V_O
K_B
R_f
i_c
L
C
Ø
V+
V-
20
22
24
26
28
30
32
34
36
38
40
42
44
46
48
50
52
54
56
58
60
62

FIG. 2

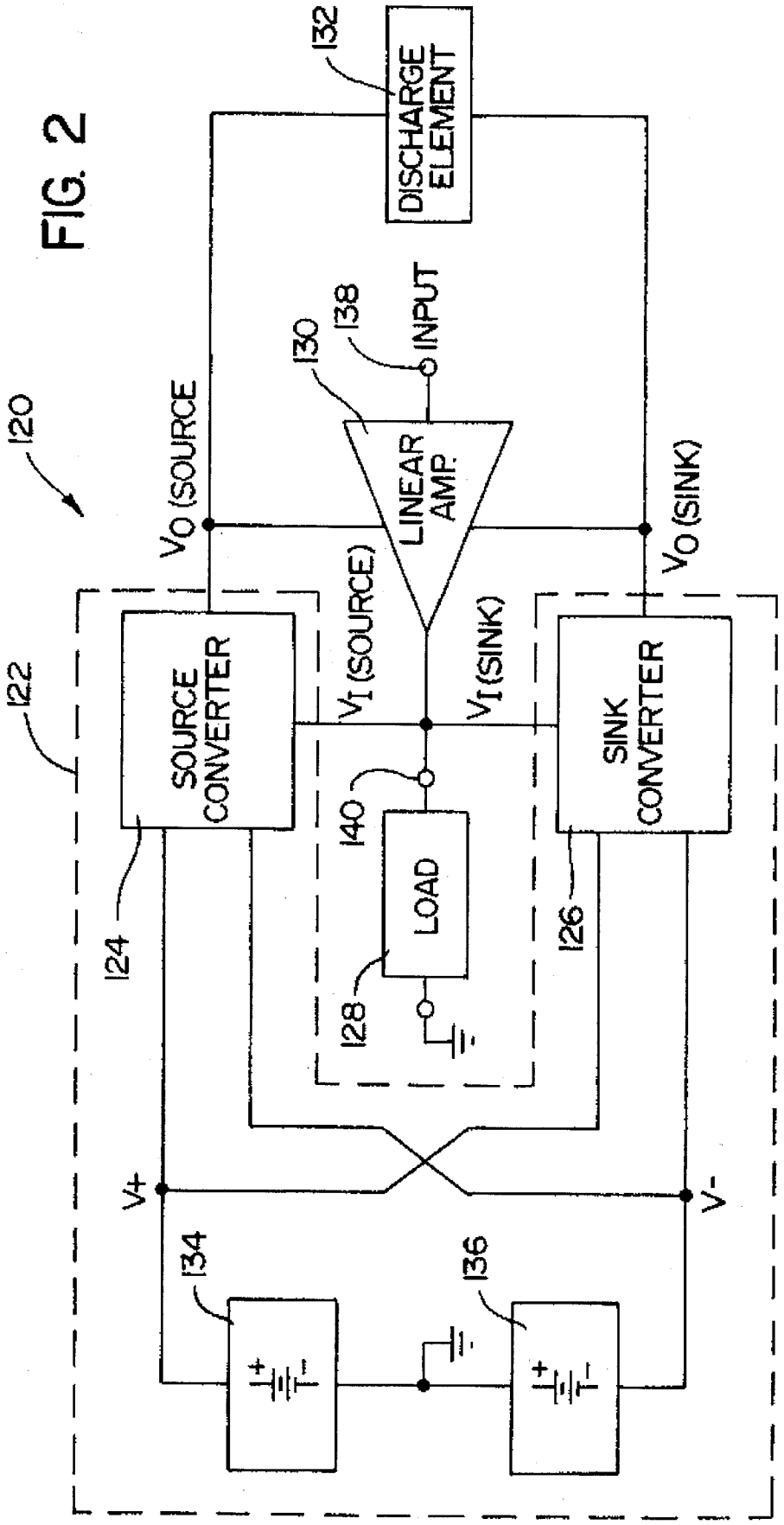
120
122
132
DISCHARGE ELEMENT
130
138
INPUT
LINEAR AMP.
V_O (SOURCE)
V_O (SINK)
V_I (SOURCE)
V_I (SINK)
SOURCE CONVERTER
SINK CONVERTER
140
LOAD
124
126
128
V+
V-
134
136

FIG. 3

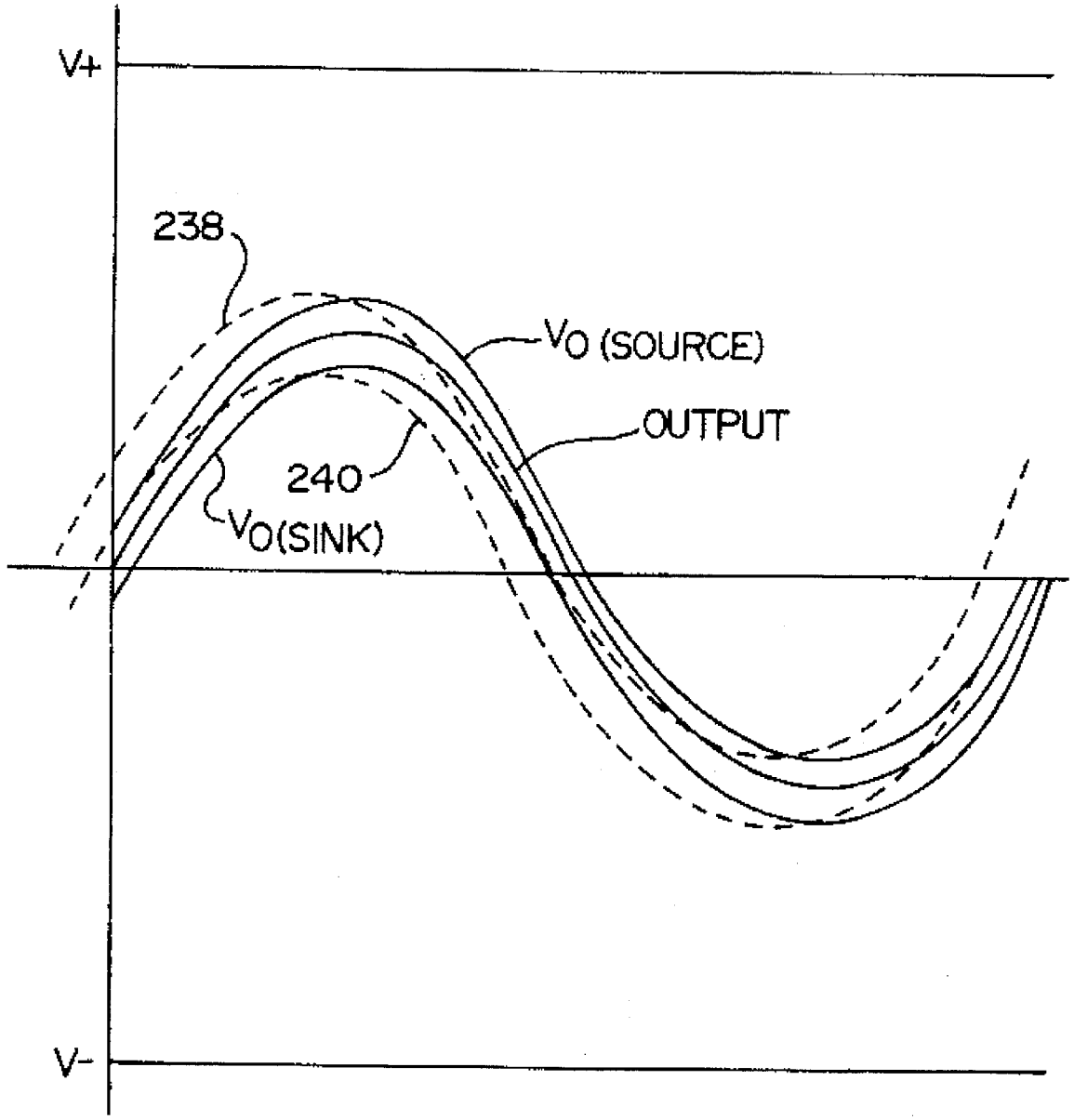

FIG. 4A

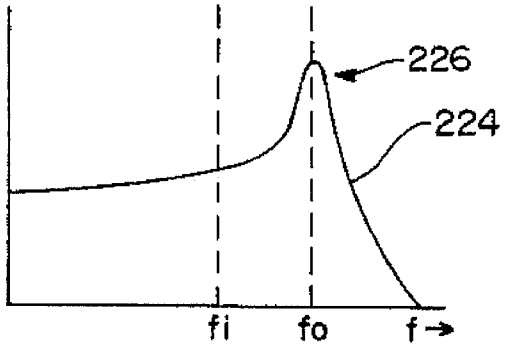

FIG. 4B

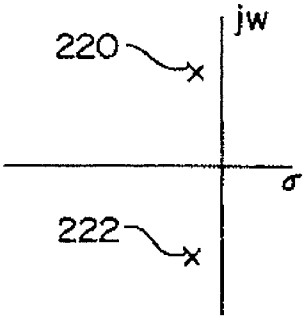

FIG. 5A

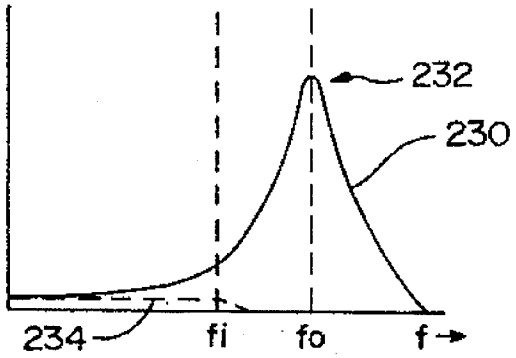

FIG. 5B

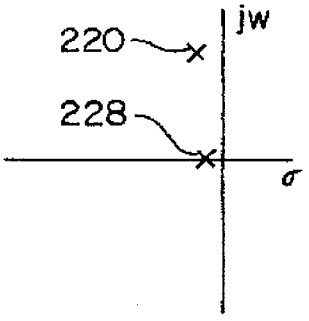

FIG. 6A

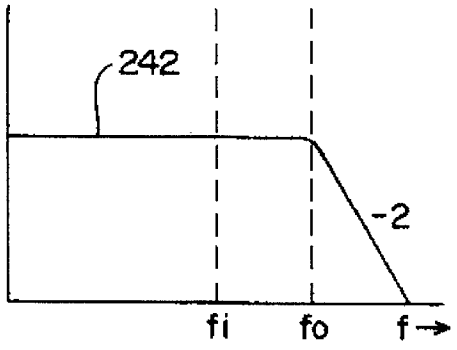

FIG. 6B

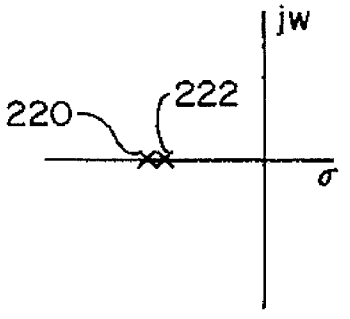

FIG. 7A

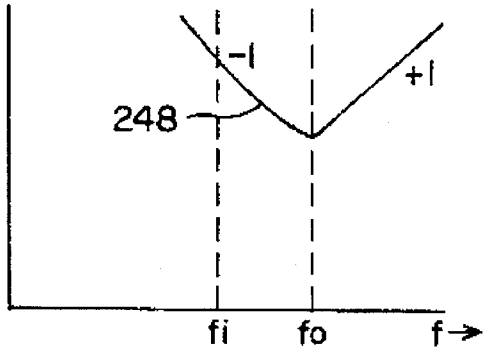

FIG. 7B

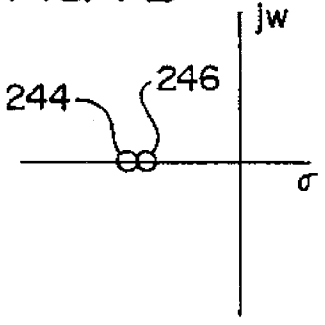

FIG. 8A

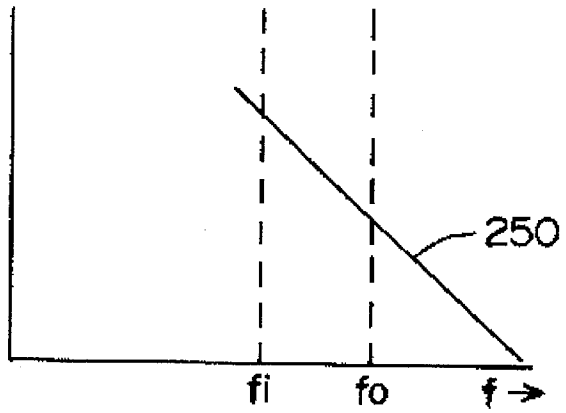

FIG. 8B

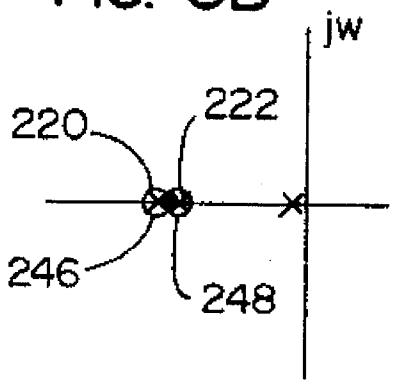

FIG. 9A

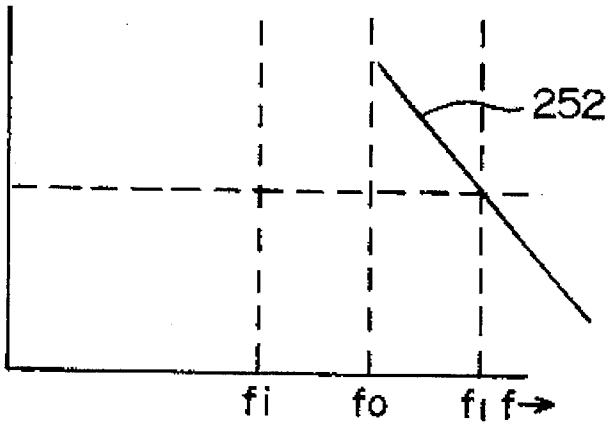

FIG. 9B

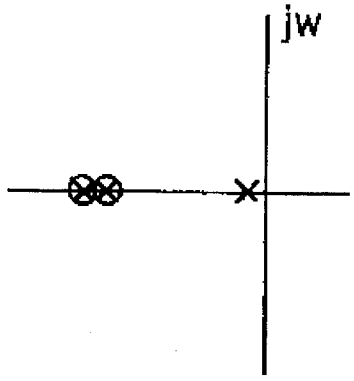

FIG. 10A

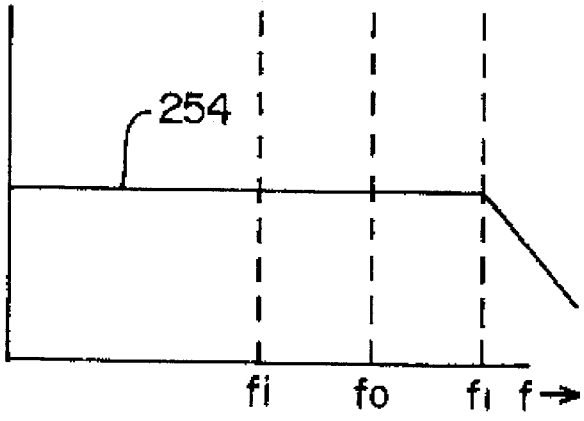

FIG. 10B

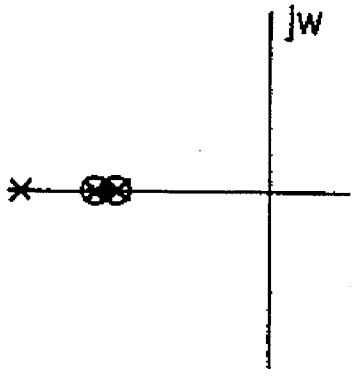

FIG. 11A

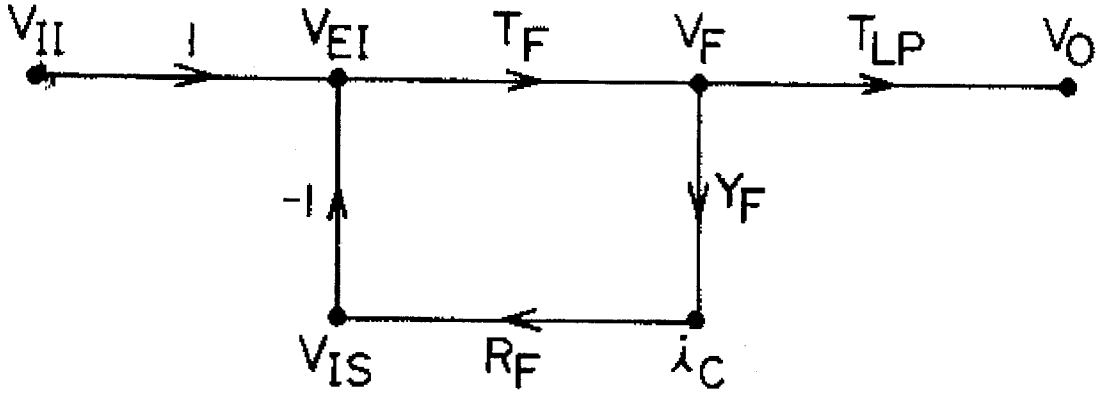

FIG. 11B

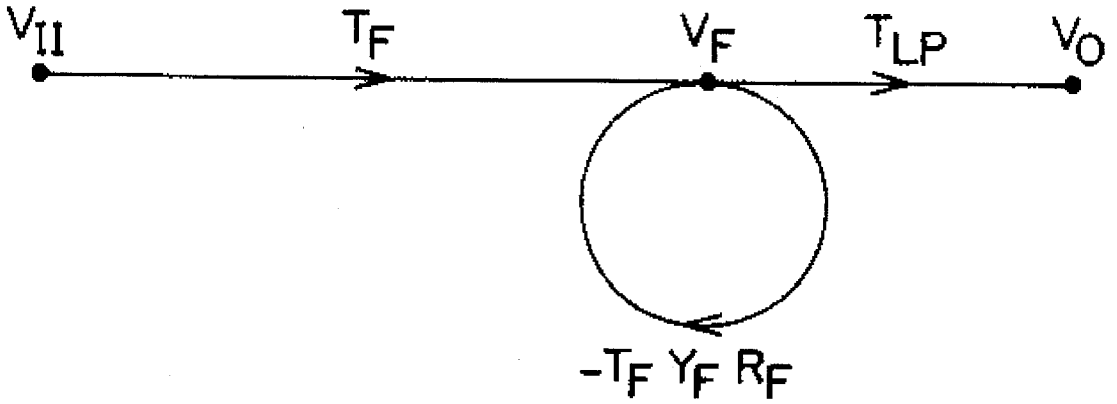

FIG. 11C

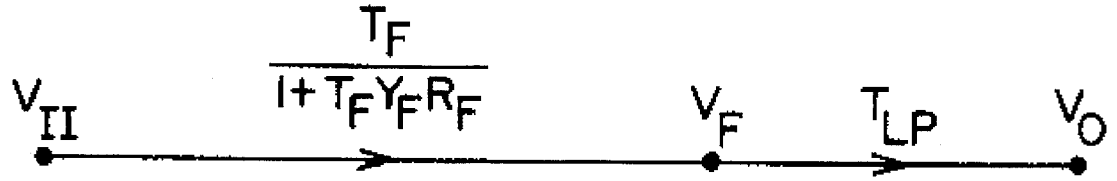

FIG. 11D

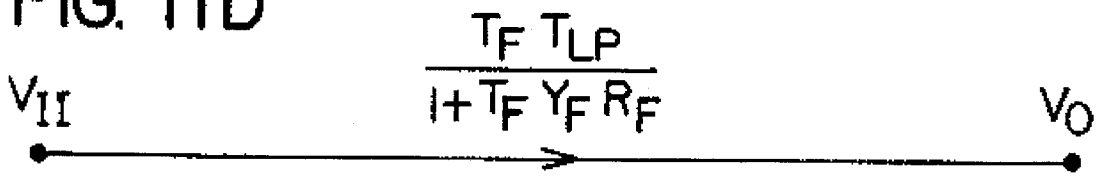

FIG. 12A

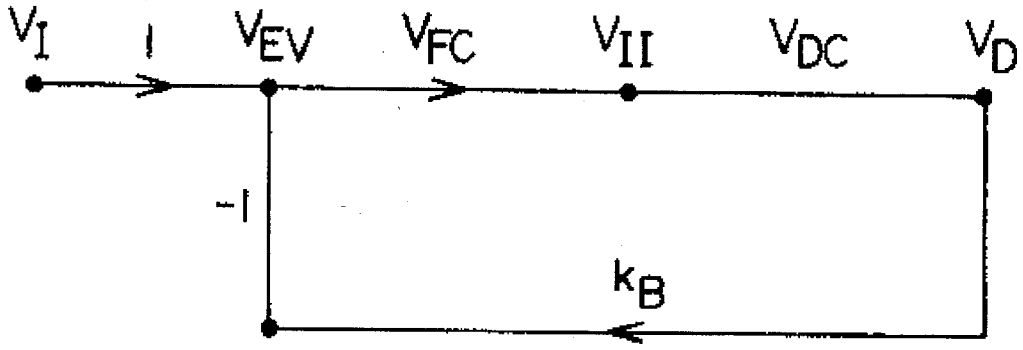

FIG. 12B

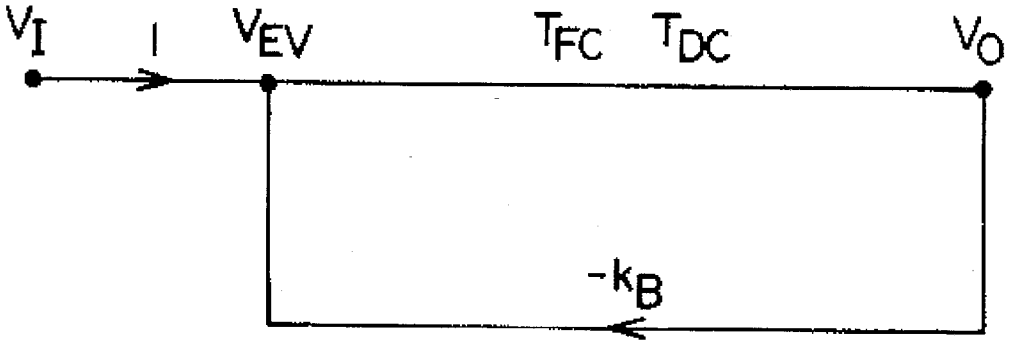

FIG. 12C

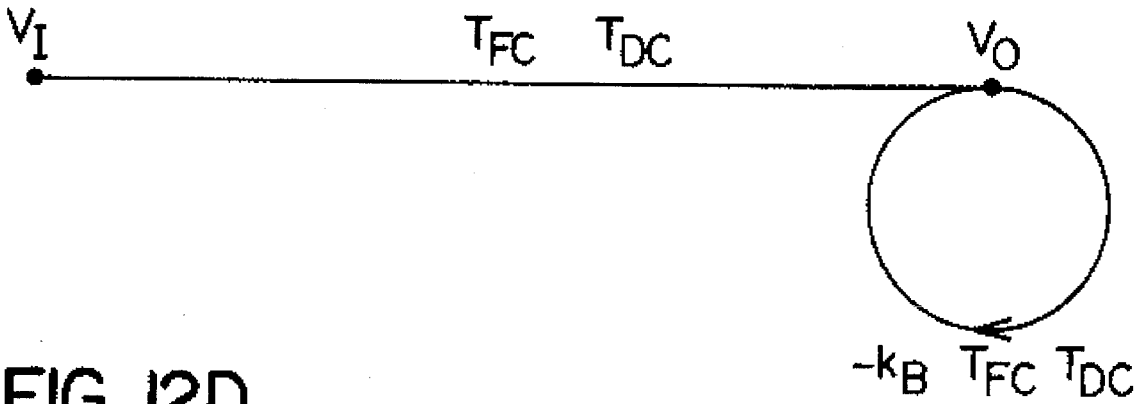

FIG. 12D

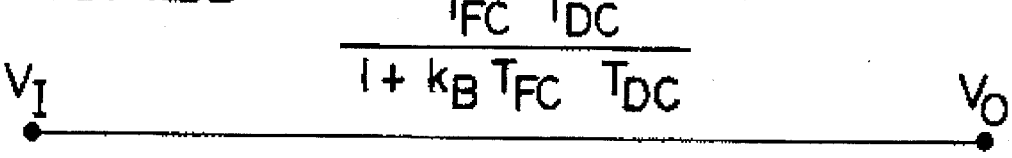

FIG. 13

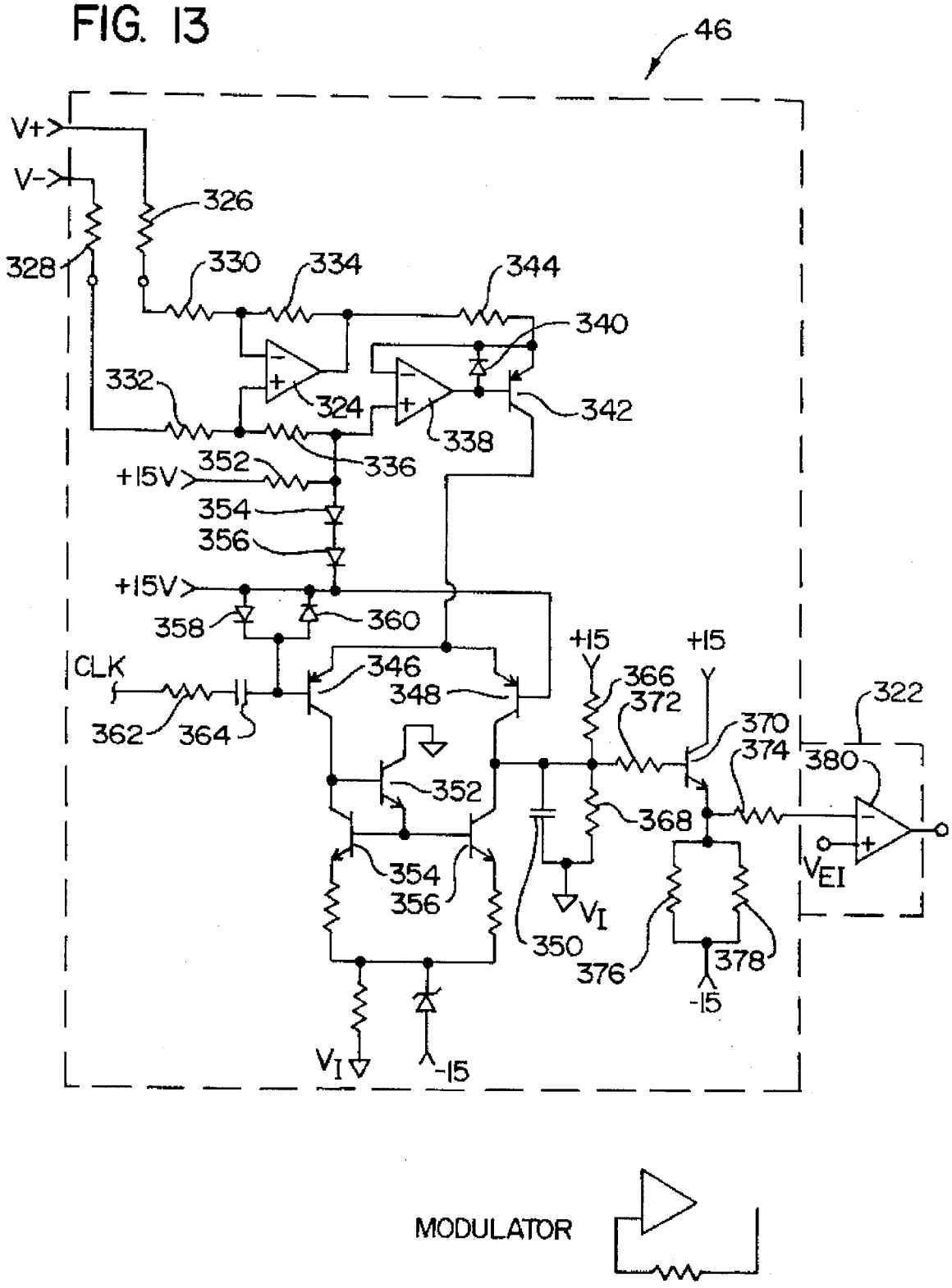
46
V+
V-
326
328
330
334
344
340
332
324
338
342
336
+15V
352
354
356
+15V
358
360
CLK
346
348
362
364
+15
+15
366
372
370
374
322
380
352
368
354
356
VI
350
376
378
-15
VEI
VI
-15
MODULATOR

FIG. 14

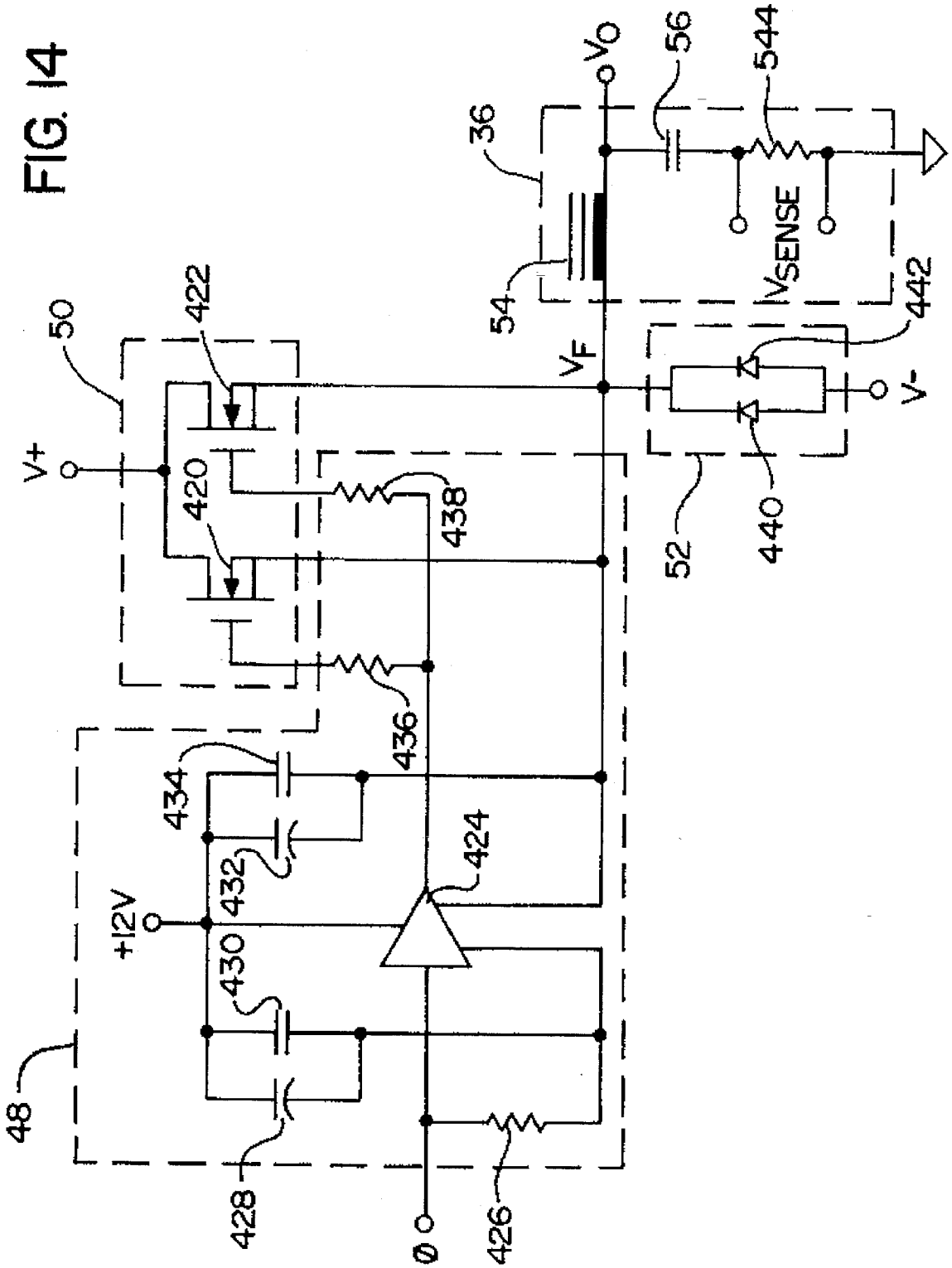
V+
50
422
420
438
436
434
432
+12V
430
424
48
428
Ø
426
36
54
V_O
56
544
V_{SENSE}
V_F
442
V-
440
52

FIG. 15

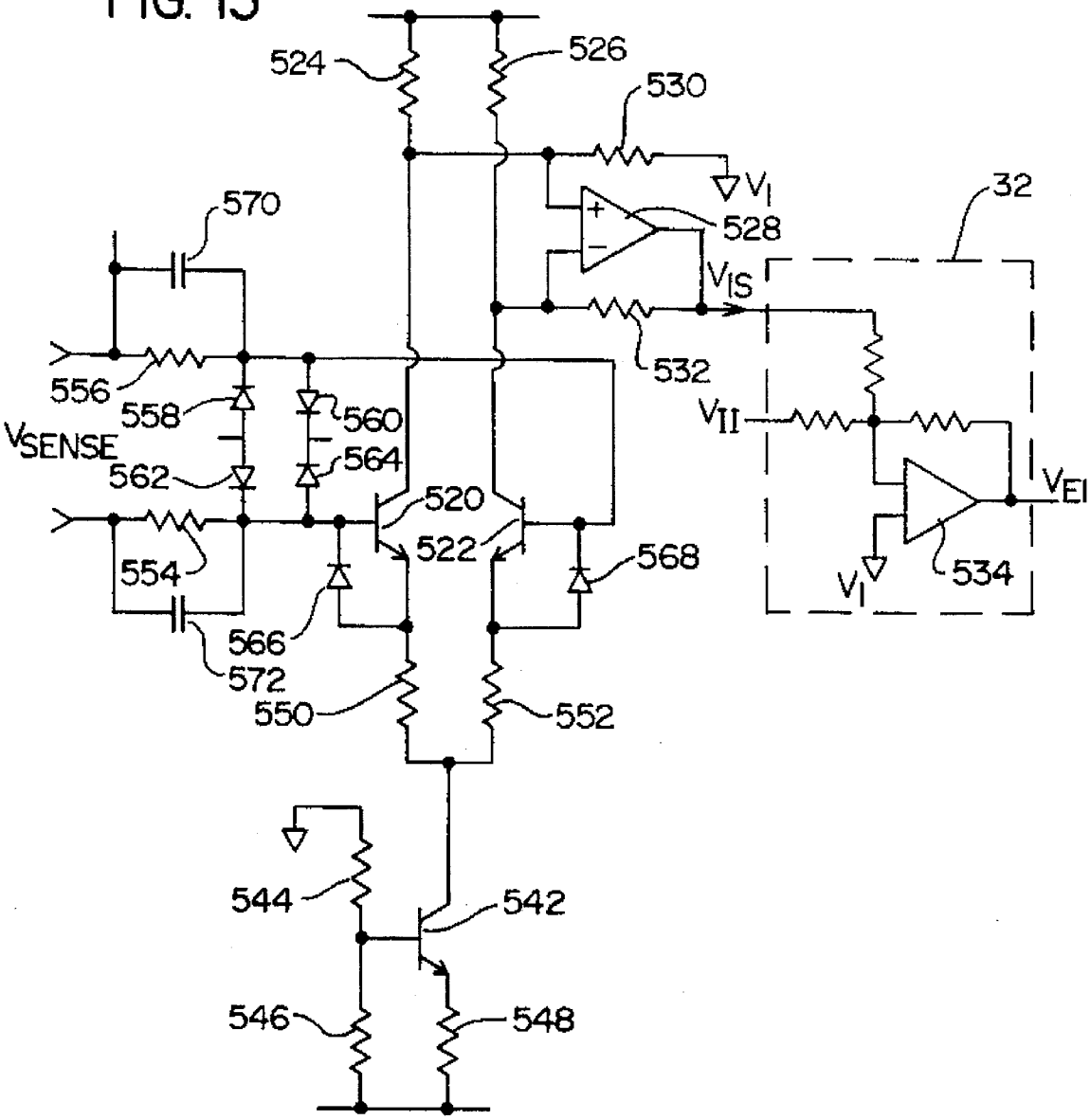
524
526
530
V_I
528
570
32
V_{IS}
556
532
558
560
V_{II}
V_{SENSE}
562
564
V_{EI}
520
522
554
568
534
V_I
566
572
550
552
544
542
546
548

FIG. 16

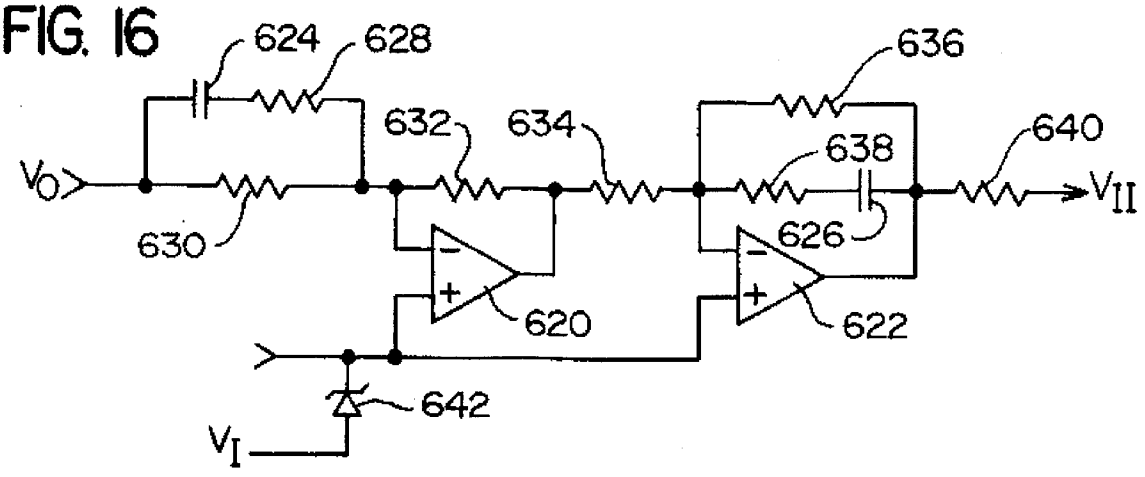
624
628
636
632
634
638
640
V_O
630
626
620
622
642
V_I
V_{II}

FIG. 17

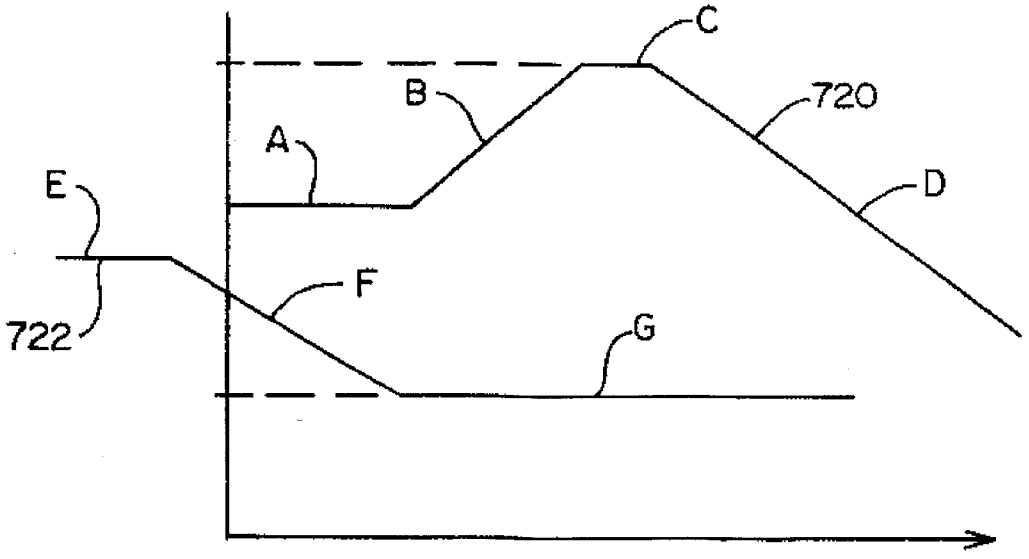
C
B
720
A
E
D
F
722
G

AUDIO FREQUENCY POWER AMPLIFIERS WITH ACTIVELY DAMPED FILTER

TECHNICAL FIELD

The present invention relates to the amplification of audio frequency signals and, more particularly, to filters used in switch mode converters of a tracking power supply.

BACKGROUND OF THE INVENTION

To reduce dissipation losses in the output stage, most audio frequency amplifiers comprise a class B or AB amplifier. A conventional class B or AB amplifier comprises a pair of emitter-coupled output transistors configured in a push-pull arrangement. The audio frequency signal is applied to the bases of these output transistors and the amplified audio frequency signal is present at the emitters thereof. In a conventional push-pull amplifier, the collector of one of the output transistors is connected to a fixed positive DC voltage to provide a current source and the collector of the other of the output transistors is connected to a fixed negative DC voltage to provide a current sink. The positive and negative DC voltages are commonly referred to as the source and sink voltages, respectively.

With a reactive load, the entire fixed voltage is present across the amplifying transistor of a class B or AB amplifier when current flows to the load, yielding high dissipation losses. These losses are particularly high with high dynamic range signals such as music signals. Accordingly, while more efficient than a pure class A amplifier, class B and AB amplifiers still exhibit significant dissipation losses with resistive loads and exhibit considerably greater losses with reactive loads. At the high power levels of modern audio amplifiers, these dissipation losses require the use of numerous expensive high power semiconductors in parallel and also that extensive steps be taken to cool the output transistors.

To obtain higher efficiencies, class D amplifiers have also been proposed as audio amplifiers. Class D amplifiers comprise a power transistor, a low pass filter, and a freewheeling diode or rectifier in parallel with the low pass filter. The power transistor is switched on and off according to a high frequency square wave signal the pulse width of which is modulated according to the audio frequency signal to be amplified. The filter then recovers the audio frequency signal by filtering off the high frequency square wave signal. The class D amplifier achieves high efficiencies by delivering current only when substantially zero volts are present across the power transistors.

While significantly more efficient than a class B or AB amplifier, a class D amplifier has high distortion that cannot be easily be corrected with negative feedback because of the phase shift introduced by the low pass filter. Further, the low pass filter tends to interact with the load in an undesirable fashion. Also, because of the relatively high frequencies involved, class D amplifiers are subject to radiation problems. Finally, class D amplifiers exhibit poor power supply rejection and thus are highly susceptible to power supply disturbances. For these and other reasons, class D amplifiers have not been used in commercial audio amplifiers.

Two other classes of high efficiency audio frequency amplifiers have been proposed to increase the efficiency of output transistors arranged in a push-pull configuration. These amplifiers are referred to as class G and class BD amplifiers and employ adaptive power supplies for generating source and sink voltages for a push-pull amplifier.

These adaptive power supplies generate source and sink voltages that increase and decrease as the audio frequency signal increases and decreases. The basic idea with these amplifiers is to provide high voltage to the push-pull amplifier only when the audio frequency signal is high. As an audio frequency signal developed from a musical source is normally relatively low with infrequent high bursts, class G and BD amplifiers used as audio amplifiers normally maintain the voltage across the power transistors at a low level, thereby greatly reducing the average power dissipation of the output transistors.

A class G amplifier normally comprises a push-pull amplifier and a stepped power supply that generates source and sink voltages that are increased and decreased in two or three discrete steps as the power requirement of the signal being amplified increases and decreases. Such an amplifier is disclosed, for example, in U.S. Pat. No. 4,484,150 to Carver and U.S. Pat. No. 3,961,280 to Sampei.

A class BD amplifier conventionally comprises a pair of highly efficient class D amplifiers to provide signal tracking source and sink voltages to a push-pull amplifier. Class BD amplifiers are generally discussed in the following articles: (a) *The Class BD High-Efficiency RF Power Amplifier* dated June 1977 and written by Frederick H. Raab; and (b) *An Amplifier With A Tracking Power Supply* dated Nov. 5, 1973, and written by V. M. Kibakin.

The present invention is particularly useful when implemented in the context of audio amplifiers containing tracking power supplies, and that application will be discussed in detail herein. However, the present invention has broader application as will become apparent from the following detailed discussion. Accordingly, the scope of the present invention should be determined according to the claims appended hereto and not the following detailed discussion.

Tracking power supplies can be classified as envelope trackers, rail-to-ground trackers, and rail-to-rail trackers; the present invention may be used to advantage in each of these configurations.

Exemplary envelope trackers are disclosed in U.S. Pat. No. 3,426,290 issued 4 Feb. 1969 to Jensen, U.S. Pat. No. 4,218,660 issued 19 Aug. 1980 to Carver, and, more recently, U.S. Pat. No. 5,075,634 issued 24 Dec. 1991 to French.

Rail-to-ground tracking power supplies are disclosed in U.S. Pat. No. 4,054,843 issued 18 Oct. 1977 to Hamada, U.S. Pat. No. 4,409,559 issued 11 Oct. 1983 to Amada, an article published by the Audio Engineering Society in **1981** entitled A HIGH EFFICIENCY AUDIO POWER AMPLIFIER (Nakagaki and Amada), and U.S. Pat. No. 4,507,619 issued 26 Mar. 1985 to Dijkstra.

Rail-to-rail tracking power supplies are disclosed in U.S. Pat. No. 4,087,759 issued 2 May 1978 to Iwamatsu, U.S. Pat. No. 4,472,687 issued 18 Sep. 1984 to Kashiwagi et al., and U.S. Pat. No. 5,200,711 issued 6 Apr. 1993 to Andersson et al.

In an amplifier having any one of these three types of tracking power supplies, the collector-emitter voltage across the amplifying transistor will ideally remain substantially constant at a low value. The basic advantage of all types of tracking power supplies is thus that dissipation losses in the amplifying transistor are reduced. Additionally, in tracking power supplies, dissipation losses of the amplifying device are ideally kept low for both resistive and reactive loads.

A tracking power supply in a class BD amplifier will thus in general reduce by varying degrees the dissipation of the output transistors relative to the dissipation of the output

transistors in a pure class B or AB amplifier. Rail-to-rail tracking power supplies are theoretically the most efficient, while envelope tracking power supplies are the least efficient of the three types of tracking power supplies. Rail-to-ground and rail-to-rail tracking power supplies will also have the additional advantage of reducing the voltage rating requirements of the output transistors.

As mentioned, in theory the most efficient of the various amplifier configurations having tracking power supplies is the rail-to-rail tracking power supply. However, despite the potential advantages theoretically obtainable by using a rail-to-rail tracking power supply, no commercially available amplifier exists that uses a rail-to-rail tracking power supply as described above.

In related U.S. patent application Ser. No. 08/154,739 assigned to the Assignee of this application, and now U.S. Pat. No. 5,396,194, the Applicants recognized that prior art amplifiers having signal tracking powers supplies do not precisely track the signal being amplified; instead, the source and sink supply voltages deviate from their theoretical levels under the following conditions: (a) high frequency audio signals; (b) open circuit or light loads; (c) certain reactive loads; (d) asymmetric signals; and/or (e) high offset voltages. This deviation of the actual source and sink supply voltages from the ideal source and sink voltages of a tracking power supply is referred to as floating.

The '739 application further recognized that this floating occurs because, under the conditions described above, insufficient current flows through the amplifying transistor to pull the supply voltage towards the reference when the audio frequency signal being tracked moves towards the reference. In particular, a class BD amplifier comprises a class B or AB output stage and a power supply containing source and sink output filters, each output filter comprising an inductor and an output capacitor. When little or no current is being drawn by the output stage, no current flows back through the inductors of the output filters to discharge the output capacitors. The source and sink voltages thus tend to hang or float until the output devices begin to draw current to discharge the output capacitors. The difference between the floating source supply voltage and the plunging sink supply voltage can become very large, and this large voltage difference can last from one cycle of the audio frequency signal to the next cycle thereof.

The large voltage across the output stage caused by floating can result in high dissipative losses in the output devices and thus requires high power transistors with a large safe operation area. The large voltages that can momentarily develop across the amplifier output stage also require that the transistors have a high breakdown voltage. Without high dissipative capacity and high breakdown voltage, the likelihood that the output devices will fail under the conditions during which floating occurs is greatly increased.

The '739 application thus proposed an audio frequency amplifier comprising a signal tracking power supply having at least one output filter and further comprising discharge means for discharging an output capacitor of the power supply output filter, thereby ensuring that the source supply voltage follows the audio frequency signal back down and/or that the sink supply voltage follows the audio frequency signal back up after the slope of the audio frequency signal changes signs.

Discharge means as described in the '739 application will guarantee that the source and sink supply voltages will not float. This results in a predetermined maximum voltage value across the output stage. Therefore, by setting this predetermined maximum voltage value at a lot level, low voltage devices can be used in the output stage of a rail-to-rail tracking power supply and, to a lesser extent, of a rail-to-ground tracking power supply.

OBJECTS OF THE INVENTION

From the foregoing, it should be apparent that a primary object of the present invention is to obtain a design for a highly efficient audio frequency power amplifier having a tracking power supply.

Another more specific object of the present invention is no obtain an audio frequency amplifier having a favorable mix of the following characteristics:

a. low distortion;

b. low thermal dissipation;

c. light weight;

d. high power;

e. allows a rail-to-rail tracking amplifier to be commercially viable;

f. allows elimination of a high voltage preamplifier; and

g. low manufacturing costs through the use of low voltage components having a relatively small safe operation area throughout the output stage.

Other objects of the present invention will become apparent from the following detailed description of the invention.

SUMMARY OF THE INVENTION

The Applicants have recognized that, while discharge means as described in the '739 application can lock the source and sink supply voltages together to prevent the voltage difference across the output stage from exceeding a predetermined maximum value, phase error in the overall frequency response of the system can cause the the supply voltages to vary from the signal being tracked, resulting in a distorted output signal. This problem is especially acute at high frequencies because the resonant frequency of the inductor used in the output filter of the tracking power supply is relatively close to the highest frequency of interest of the system.

Therefore, while the discharge means disclosed in the '739 application can guarantee that the source and sink supply voltages will track the output signal, these supply voltages may be slightly offset from the output signal due to phase shift introduced by the power supply output filter.

To overcome the problem in frequency response caused by the power supply output filter, the present invention provides a class BD amplifier comprising: (a) an output stage for amplifying an input voltage to obtain an amplified output signal; (b) a tracking power supply having an output filter comprising an inductor and a capacitor; (c) an active damping control circuit for actively damping oscillations in the power supply output filter; and (d) a compensation circuit for compensating for the frequency response of the actively damped output filter.

The operation of an amplifier so constructed can perhaps best be explained using the terminology employed in control theory to describe a pole-zero diagram. In this context, the inductor in the power supply output filter results in two poles being placed on the pole-zero diagram; these poles are equally spaced above and below the σ-axis and lie fairly close to the $j\omega$-axis. This arrangement of poles is inherently unstable, as it does not take much for these poles to move into the right half of the s-plane.

The active damping control circuit effectively damps oscillations in the filter to move the poles contributed by the inductor onto the σ-axis and away from the right half of the s-plane. Because the two poles contributed by the actively damped inductor now lie on the σ-axis, they can easily be compensated for by the compensating circuit. In particular, the compensating circuit places two zeros on top of the two poles contributed by the actively damped inductor to cancel the effect of these poles. The result is a single remaining pole located on the pole-zero diagram near the origin; this remaining pole is contributed by the error amplifier. Such a system provides a stable, nearly flat frequency response within the frequency range of interest.

To the extent that the zeroes provided by the compensating circuit are misaligned with the poles contributed by the actively damped output filter, this misalignment provides only a small, acceptable amount of variation in the frequency response of the system. In contrast, without the damping of the filter oscillations provided by the active damping control circuit, the poles contributed by the filter inductor are very difficult to cancel. In the undamped case, even slight misalignment between the poles contributed by the inductor and the zeroes contributed by the compensation circuit can result in severe stability problems in the overall frequency response of the system that may lead to ringing or even self-sustaining oscillations.

The present invention is of particular importance in the context of a tracking power supply of an audio amplifier; however, the concept of actively damping the filter and then compensating for the actively damped filter has broader application in any system where the frequency response of the output filter must be stable and flat.

Additionally, the present invention is described herein in the context of a second order conventional filter. The principles of the present invention may be applied to more complex filters using a state variable approach.

BRIEF DESCRIPTION OF THE DRAWING

FIG. **1** is a block diagram of a complete converter constructed in accordance with, and embodying, the principles of the present invention;

FIG. **2** is a block diagram of an audio amplifier employing a converter such as that depicted in FIG. **1**;

FIG. **3** depicts exemplary waveforms associated with the the block audio amplifier shown in FIG. **2**;

FIGS. **4A**, **4B**, **5A**, **5B**, **6A**, **6B**, **7A**, **7B**, **8A**, **8B**, **9A**, **9B**, **10A** and **10B** depict transfer function curves and pole-zero diagrams for the complete converter shown in FIG. **1** and various components thereof;

FIGS. **11A**, **11B**, **11C**, **11D**, **12A**, **12B**, **12C** and **12D** contain signal flow diagrams for the complete converter shown in FIG. **1** and a damped converter component thereof;

FIGS. **13**, **14**, **15** and **16** contain a schematic diagram depicting circuitry used to implement the block diagram shown in FIG. **1**; and

FIG. **17** contains a diagram of the transfer function of the forward compensator of the complete converter shown in FIG. **1**.

DETAILED DESCRIPTION OF THE INVENTION

Referring to the drawing, depicted at **20** in FIG. **1** is a block diagram of an exemplary complete converter constructed in accordance with, and embodying, the principles of the present invention.

The complete converter **20** basically comprises an offset circuit **22**, a first summer **24**, a forward compensator block **26**, a damped converter block **28**, and a unity gain feedback amplifier **30**. The damped converter block **28** itself basically comprises a second summer **32**, a forward gain block **34**, and a low pass filter **36**. An input voltage V_I, a positive raw supply voltage V+, and a negative raw supply voltage V− are present at input terminals **38**, **40**, and **42**, respectively, while an output voltage V_O is present at an output terminal **44**.

The offset circuit **22** in the exemplary complete converter **20** is set to provide a positive predetermined voltage offset to the input voltage V_I.

The forward gain block **34** comprises a modulator circuit **46**, a gate driver circuit **48**, a gate **50**, and a freewheeling diode **52**. The input to the forward gain circuit **34** is a current damping loop error voltage V_{EI}. Based on this error voltage V_{EI}, the modulator circuit **46** opens and closes the gate **50** through the gate driver circuit **48** to obtain a low pass filter input voltage V_F,

The low pass filter **36** comprises an output inductor **54**, an output capacitor **56**, and an instrumentation amplifier **58**. High frequency components of the low pass filter input voltage V_F generated by the forward gain block are removed by the low pass filter **36** to obtain the output voltage V_O. The instrumentation amplifier **58** generates a current damping loop feedback voltage V_{IS} indicative of the resonant current within the output capacitor **56**; the second summer **32** adds the current damping loop feedback voltage V_{IS} to a current damping loop input signal V_{II} to obtain the current damping loop error voltage V_{EI}.

The feedback amplifier **30** generates a voltage loop feedback voltage V_{FV} based on the output voltage low pass filter input voltage. The first summer **24** adds the voltage loop feedback voltage V_{FV} to the input voltage V_I to obtain a voltage loop error voltage V_{EV}. This voltage loop error voltage V_{EV} is passed through the forward compensation block **26** to obtain the current damping loop input voltage V_{II}.

Accordingly, the complete converter **20** as shown in FIG. **1** basically comprises two feedback loops: (a) an inner or secondary loop **60** including the forward gain block **34**, the low pass filter **36**, and the second summer **32**; and (b) an outer or primary loop **62** including the forward compensator block **26**, the damped converter block **28**, and the feedback amplifier **30**.

The inner feedback loop **60** varies the current damping loop error voltage V_{EI} based on the resonant current flowing through the output capacitor **56** to actively damp oscillations within the filter **36**. Stated alternatively, the output inductor **54** contributes two poles that lie in the left half of the s-plane; these poles are spaced above and below the σ-axis adjacent to the jω-axis. The active damping introduced by the inner feedback loop **60** causes the poles contributed by the output inductor **54** to move away from the right half of the s-plane onto the σ-axis. The resulting damped converter **28** thus contributes two poles that lie well within the left half of the s-plane on the σ-axis. Without this active damping, the frequency response of the low pass filter **36** results in loop instability because the resonant frequency of the output inductor **54** is relatively close to the highest frequency of interest.

The forward compensator block **26** in the outer feedback loop forward compensates for the frequency response of the damped converter block **28**. More particularly, the forward compensator block **26** results in a zero being placed on top of each the two poles contributed by the damped converter

28 as described above. Since the two poles contributed by the damped converter **28** lie on the σ-axis, the two zeros contributed by the forward compensator block need not be exactly aligned with the two poles contributed by the converter **28**; any slight misalignment between these poles and zeros will result in a slight but acceptable variation in frequency response within the frequency range of interest.

The outer feedback loop **62** is constructed in a conventional manner such that the modulator circuit **46** varies the widths of the pulses that form the low pass filter input voltage V_F to cause the output voltage V_O to track the input voltage V_I. The feedback amplifier **30** contributes a single zero on the σ-axis at or near the origin. Because of the offset provided by the offset circuit **22**, the output voltage V_O will thus track the input voltage V_I but will be offset above the input voltage by the predetermined voltage offset.

As the poles contributed by the filter **36** have been actively damped by the inner loop **60** and cancelled by the zeros contributed by the forward compensator block **26**, the transfer function of the complete converter **20** thus comprises a single zero at or near the origin, resulting in an essentially flat frequency response within the frequency range of interest.

Referring now to FIG. **2**, a typical operating environment of the complete converter **120** will be described in further detail. Depicted at **120** in FIG. **2** is an exemplary amplifier having a power supply **122** incorporating source and sink converters **122** and **124**. The source converter **122** is formed by the complete converter **20** shown in FIG. **1**; the sink converter **122** is in all respects the same as the complete converter **20** except that: (a) the positions of the gate **50** and freewheeling diode **52** are exchanged; and (b) the offset circuit **22** is set to provide a negative predetermined offset voltage to the input voltage V_I. The positive and negative predetermined offset voltages will usually, although not necessarily, be the same.

The amplifier **120** drives a load **128** and further comprises a linear amplifier **130** and a discharge element **132**. The power supply **122** further comprises conventional positive and negative direct current power sources **134** and **136**. The linear amplifier **130** is a conventional class AB amplifier comprising a pair of transistors arranged in a push-pull configuration. The discharge element **132** is connected across the linear amplifier **130** to discharge the output capacitors within the source and sink converters **124** and **126** and thus reduce floating of these signals. Examples of the linear amplifier **130**, discharge element **132**, and direct current power sources **134** and **136** were discussed in detail in the Applicants' copending U.S. patent application Ser. No. 08/154,739, which is incorporated herein by reference.

The signal names employed above with reference to FIG. **1** will be used consistently in the following discussion of FIG. **2**, with further definition being provided when necessary to distinguish between signals associated with the source converter **124** and the sink converter **126**. The positive raw supply signals V+ and V– described above are generated by the positive and negative direct current power sources **134** and **136**, respectively.

As shown in FIG. **2**, a signal INPUT is applied to an input terminal **138** of the linear amplifier **130**. A signal OUTPUT generated by the linear amplifier **130** is present at an output terminal **140**. The OUTPUT signal is used as the input voltage $V_{I(SOURCE)}$ and $V_{I(SINK)}$ to the source and sink converters **124** and **126**. As the output voltages $V_{O(SOURCE)}$ and $V_{O(SINK)}$ of the converters **124** and **126** will track, with offset, the signals $V_{I(SOURCE)}$ and $V_{I(SINK)}$ input thereto, these output voltages $V_{O(SOURCE)}$ and $V_{O(SINK)}$ will track the OUTPUT signal but will be offset above and below the OUTPUT signal by the positive and negative predetermined offset voltage.

FIG. **3** depicts the relationships of the signals V+, V–, $V_{O(SOURCE)}$, $V_{O(SINK)}$, and OUTPUT. The discharge element **132** maintains the difference between the signals $V_{O(SOURCE)}$ and $V_{O(SINK)}$ and the converter circuits **124** and **126** containing the actively damped and forward compensated filter **36** ensure that no phase shift occurs between the signals $V_{O(SOURCE)}$ and OUTPUT or between the signals $V_{O(SINK)}$ and OUTPUT with the frequency range of interest. The elimination of floating and phase shift ensures that the proper voltage drop is present across the linear amplifier **130** to allow this amplifier **130** to function properly.

The theory of operation of the complete converter **20** shown in FIG. **1** will now be explained in further detail with reference to FIGS. **4–12**.

FIGS. **4–10** show the transfer functions in the frequency domain and pole-zero diagrams for the complete converter **20** and various components and sub-components thereof. FIGS. **11** and **12** depict signal flow diagrams representing the damped converter **28** and the complete converter **20**, respectively.

FIGS. 4A and 4B depict the operating characteristics of the low pass filter **36**. As shown, this filter **36** contributes two poles **220** and **222** (FIG. 4B) which result in a frequency response curve **224** thereof having a peak **226** in the frequency domain at a resonant frequency f_o (FIG. 4B). The resonant frequency f_o is determined by the characteristics of the inductor **54**. The transfer function T_{LP} and admittance Y_F of the filter **36** are set forth in the following equations (1) and (2), respectively:

$$T_{LP} = \frac{X_C}{X_C + X_L} \qquad \text{Equation (1)}$$

$$Y_F = \frac{1}{X_C + X_L} \qquad \text{Equation (2)}$$

The situation in which the filter **36** is included undamped and uncompensated for in a feedback loop is depicted in FIGS. **5**A and **5**B. The feedback loop adds a pole **228** at or near the origin. The frequency response curve **230** of the undamped and uncompensated for filter within a feedback loop contains a peak **232** in the frequency domain at the resonant frequency f_o. The highest frequency of interest is indicated at f_i in FIG. 4A–12A. In an audio amplifier, the highest frequency of interest is normally 20 kHz. So that the audio signal may be tracked accurately, the inductor **54** is selected such that its resonant frequency f_o is approximately 60–100 kHz. Accordingly, the resonant frequency f_o is relatively close to the highest frequency of interest f_i and must be that way if the converters **124** and **126** art to track accurately.

This arrangement described in relation to FIGS. **5**A and **5**B results in a significant deviation at the highest frequency of interest f_i between the actual frequency response curve and the desired frequency response curve indicated by dashed lines at **234**; this deviation is shown at **236** in FIG. **5**A and results in unacceptable phase shift in the tracking signal at the output of the filter **36**. As shown by dotted lines **238** and **240** in FIG. **3**, shifting the phase of the converter output voltages $V_{O(SOURCE)}$ and $V_{O(SINK)}$ can result in these signals crossing over the audio signal being amplified. Such phase shift will thus prevent proper operation of the linear amplifier **130**.

The inner feedback loop **60** described above actively damps the oscillations at the resonant frequency f_o and

results in the damped converter **28** having a frequency response curve **242** as depicted in FIG. **6**A. This frequency response curve **242** is flat out to the resonant frequency f_o, at which point it drops with a slope of −2. As shown in FIG. **6**B and described in detail below, this active damping effectively moves the two poles **220** and **222** contributed by the filter **36** away from the right half of the s-plane and onto the σ-axis.

Referring for a moment to FIG. **11**A, depicted therein is a signal flow diagram representing the damped converter **28**. This diagram may be simplified as shown in FIGS. **11**B–D to obtain the following Equation (1):

$$V_O/V_{II} = \frac{T_F T_{LP}}{1 + T_{FY} F_{RF}} \qquad \text{Equation (3)}$$

Given Equations (1) and (2) above, Equation (3) can be solved to obtain the damped converter gain T_{DC}:

$$T_{DC} = \frac{T_F}{LCs^2 + T_F R_F C s + 1} \qquad \text{Equation (4)}$$

With

$$R_F = \frac{1}{T_F}\sqrt{L/C} \qquad \text{Equation (5)}$$

we have critical damping, and the gain T_{DC} of the damped converter becomes

$$T_{DC} = \frac{T_F}{(s/\omega_O + 1)^2} \qquad \text{Equation (6)}$$

Once the filter has been damped as just described, the forward compensator **26** can be provided to the system. The gain T_{FC} of the forward compensator block **26** is as follows:

$$T_{FC} = \frac{K_F(s/\omega_O + 1)^2}{s} \qquad \text{Equation (7)}$$

Accordingly, as shown in FIG. **7**B, the forward compensator block **26** contributes two zeroes **244** and **246** on the σ-axis that coincide with the two poles **220** and **222** contributed by the damped converter **28**. The frequency response curve of the forward compensator block **26** is shown at **248** in FIG. **7**A. This frequency response curve has a slope of −1 below the resonant frequency f_o and a slope of +1 above the resonant frequency f_o.

The frequency response curve of the forward compensator block **26** and the damped converter **28** together is shown at **250** in FIG. **8**A. The slope of the frequency response curve **250** is −1. As shown in FIG. **8**B, the zeroes **246** and **248** cancel the poles **220** and **222**. As will be explained in detail below, the zeroes **246** and **248** may be slightly misaligned with the poles **246** and **248** without adversely affecting the output of the complete converter **20**.

Integrating the forward compensator **26** and damped converter **28** together into the complete converter **20** results in the signal flow diagram shown in FIG. **12**A. By simplifying the diagram in FIG. **12**A as shown in FIG. **12**B–D, the following equation (8) is obtained:

$$V_O/V_I = \frac{T_{FC} T_{DC}}{1 + k_B T_{FC} T_{DC}} \qquad \text{Equation (8)}$$

By substituting into equation (8) the gain T_{FC} of the forward compensator **26** (equation 7) and the gain T_{DC} of the damped converter **28** (equation 6) and simplifying, we obtain the following Equation (9) defining the gain T_{CC} of the complete converter **20**:

$$T_{CC} = \frac{1}{C} \cdot \frac{k_B k_F T_F}{1 + s/k_B k_F T_F} \qquad \text{Equation (9)}$$

It should be recognized that the damped converter has a gain of $1/k_B$ and a bandwidth ω_C of $1/k_B k_F T_F$. The application of the complete converter **20** into the signal tracking power supply **122** of the audio amplifier **120** requires a gain of 1. Therefore, k_B=1 and ω_C=$1/k_F T_F$.

FIG. **9**A depicts the open loop frequency response curve **252** of the complete converter **20**, while FIG. **10**A depicts the closed loop frequency response curve **254** of the complete converter **20**. The open loop frequency response curve **252** has a slope of −1 and a magnitude of 1 at a roll-off frequency f1. When the loop is closed, the frequency response curve **254** is flat with unity gain out to the roll-off frequency f1, at which point the curve **254** has a slope of −1.

If the zeroes **244** and **246** are slightly misaligned with the poles **220** and **222**, the frequency response curve **254** may have a perturbation at the resonant frequency f0; however, this perturbation will be slight and is insignificant below the highest frequency of interest fi. The result is that the frequency response of the complete converter will be flat within the entire frequency range of interest, resulting in little or no phase shift even near the highest frequency of interest.

Referring now to FIGS. **13**–**16**, the details of construction of the exemplary complete converter **20** will be described. The modulator block **46** is depicted in detail in FIG. **13**. The gate driver **48**, gate **50**, freewheeling diode **52**, and low pass filter **36** are depicted in detail in FIG. **14**. The forward compensator **26** is described in further detail in FIG. **15**. FIG. **16** depicts the transfer function of the forward compensator **26** in further detail.

Referring initially to FIG. **13**, the modulator block **46** basically comprises a triangle generator **320** and a comparator circuit **322**. The triangle generator **320** generates a triangle wave signal the amplitude of which varies in proportion to the difference between the raw supply voltages V+ and V−. Under heavy loads, these voltages V+ and V− tend to droop. Unless compensated for, this droop will cause a deviation in the gain of the inner loop **60** that will result in the loop becoming unstable. By varying the amplitude of the triangle wave, the triangle generator **320** compensates for the droop of the raw supply voltages V+ and V− and thereby maintains the gain of the inner loop **60** at 1.

The triangle generator **320** operates basically as follows. An amplifier **324** and its associated resistors **326**–**336** generate a voltage signal that is a scaled down version of the differential voltage between the raw supply voltages V+ and V−. Based on the output of the amplifier **324**, an amplifier **338**, diode **340**, transistor **342**, and resistor **344** generate a current signal that is also proportional to the differential voltage between the raw supply signals V+ and V−.

A clock signal CLK opens and closes transistors **346** and **348** alternately; when the transistor **348** is opened, the current signal generated at the emitter of the transistor **342** charges a capacitor **350**; when the transistor **346** is opened, transistors **352**, **354**, and **356** are operated to provide a path for discharging the capacitor **350**. Accordingly, the voltage across the capacitor **350** forms the triangle wave signal discussed above.

The rate at which the capacitor **350** is charged and discharged is determined by the amplitude of the current signal generated by the transistor **342**. The charge/discharge rate of the capacitor **350** determines the amplitude of the triangle signal developed thereacross. Thus, the amplitude of the triangle voltage signal developed across the capacitor

350 varies in proportion to the differential voltage between the raw supply voltages V+ and V–.

The remaining components shown in FIG. 13 facilitate the operation of the components described above and will be discussed herein only briefly. A resistor 352 and diodes 354 and 356 shift the voltage applied to the bases of the transistors 346 and 348 to an appropriate level. Diodes 358 and 360 form a clamp that limits the differential voltages across the resistors 346 and 348. A resistor 362 limits input current, and a capacitor 364 eliminates DC offset. Resistors 366 and 368 set the center of the triangle wave and prevent floating. A transistor 370 is configured as an emitter-follower to obtain a low output impedance. Resistors 372 and 374 damp parasitic oscillations, and resistors 376 and 378 set the quiescent current of the transistor 370.

The triangle voltage signal generated by the triangle generator 320 is applied to a – terminal of comparator 380. The current damping loop error voltage V_{EI} is applied to the negative terminal of the comparator 380. The output of the comparator 380 is a pulse-width modulated drive signal ϕ, where the widths of the pulses that comprise the drive signal ϕ varies based on the magnitude of the current damping loop error voltage V_{EI}.

As shown in FIG. 14, the drive signal ϕ turns ON and OFF MOSFETs 420 and 422 through the gate driver 48. These MOSFETs 420 and 424 are arranged in parallel to form the gate 50. The number of MOSFETs employed depends upon the power rating of the amplifier in which the complete converter 20 is used.

The drive signal ϕ is applied to the gate drive circuit 48. In particular, the gate drive circuit 48 comprises a gate driver 424, a resister 426, and capacitors 428, 430, 432, and 434. The gate driver 424 provides the gate drive voltage and current necessary to turn ON and OFF the MOSFETs 420 and 422 that form the gate 50. The resistor 548 forces the driver 424 to generate to turn the MOSFETs 420 and 422 OFF should an open circuit occur across the gate driver 424. The capacitors 428–434 are supply bypass capacitors that provide a low impedance path to ground for any high frequency signals present on the supply voltage for the gate driver 424. A resistor 436 is provided for the MOSFET 420 and a resistor 438 is provided for the MOSFET 422 to damp parasitic oscillations.

FIG. 14 further depicts that the freewheeling diode 52 can actually comprise two diodes 440 and 442 in parallel depending upon the power rating of the amplifier.

A current sense resistor 544 is provided in series with the output capacitor 56. A voltage V_{SENSE} developed across the sense resistor 544 is proportional to the current through the output capacitor 56.

Referring now to FIG. 15, shown in detail therein is the instrumentation amplifier 58. The instrumentation amplifier 58 generates a voltage V_{IS} at its output based on the voltage V_{SENSE} at its input. In particular, the voltage V_{SENSE} is applied across transistors 520 and 522; these transistors 520 and 522 form a differential transconductor that causes differential output currents to flow through resistors 524 and 526. These differential output currents are proportional to the differential voltage V_{SENSE}. An amplifier 528 and its associated resistors 530 and 532 converts the differential output currents into the current damping loop feedback voltage V_{IS}. So obtained, the current damping loop feedback voltage V_{IS} is proportional to the resonant current flowing through the output capacitor 56.

The current damping loop feedback voltage V_{IS} is applied to one input of an operational amplifier 534. This operational amplifier 534 and it associated resistors 536, 538, and 540 form the second summer 32.

The remaining components shown in FIG. 15 facilitate the operation of the components described above and will be described herein only briefly. Transistor 542 and resistors 544, 546, and 548 form a current source to bias the resistors 520 and 522. Resistors 550 and 552 provide local degeneration. Resistors 554 and 556 and diodes 558–568 provide overvoltage protection. Capacitors 570 and 572 allow high frequency signals to bypass the resistors 554 and 556.

The forward compensator 26 will now be explained in further detail with reference to FIG. 16. The compensator 26 comprises first and second operational amplifiers 620 and 622, first and second capacitors 624 and 626, and first through seventh resistors 628–640. Also shown in FIG. 16 is a zener diode 642 that forms the offset circuit 22. It should also be noted that the function of the first adder 24 is inherent in the operation of the exemplary compensator 26 shown in FIG. 16.

Perhaps the best way to explain the operation of the circuit shown in FIG. 16 is by referencing the elements thereof to corresponding portions of the transfer function thereof. The transfer function for the circuit shown in FIG. 16 is shown in FIG. 17.

In particular, FIG. 17 shows that the overall frequency response curve of the compensator 26 as shown at 248 in FIG. 7A is actually comprised of two separate curves 720 and 722. The first curve 720 is associated with the op amp 620 and is comprised of segments A, B, C, and D, while the second curve 722 is associated with the op amp 622 and is comprised of segments E, F, and G.

Segment A is contributed by resistors 630 and 632. Segment B is contributed by resistor 632 and capacitor 624. Segment C is contributed by resistors 632 and 628. Segment D is due to the op amp 620 running out of gain at higher frequencies. Segment E is contributed by resistors 634 and 636. Segment F is contributed by resistor 634 and capacitor 626. Segment G is contributed by resistor 28 and resistor 638. It should be noted that the juncture of segments B and C should be a factor of 5 above the loop bandwidth.

Because the it is used as a voltage follower, the exemplary complete complete converter 20 employs two separate and distinct ground referencing schemes to simplify the implementation thereof.

In particular, the first scheme is employed in the block diagrams shown in FIGS. 1 and 2. The ground shown in FIGS. 1 and 2 ground is connected to the common or center tap of the main supply. VI, VF, VO, V+, and V– are always referred to this first ground.

The second grounding scheme is employed in the control circuitry and is indicated by a triangle symbol instead of the symbol using three short lines. This second ground is connected to the input, VI. The second summer's input voltages VI and VFV are referred to the first ground, but its output VEV is referred to the second ground. The subsequent signals VII, VEI, and VIS are also referred to the second ground.

The use of these two separate grounding schemes is not essential to practice the present invention but significantly simplifies the implementation of the present invention.

From the forgoing, it should be clear that the present invention may be embodied in forms other than described above. The above-described example is therefore to be considered in all respects illustrative and not restrictive, the scope of the invention being indicated by the appended claims rather than the foregoing description. All changes that come within the meaning and scope of the claims are intended to be embraced therein.

I claim:

1. An amplifier system for generating an output signal based on an input signal comprising:

linear amplification means for amplifying an input signal to obtain an amplified output signal, the linear amplification means having at least one supply terminal;

first amplification means for generating a first supply signal and applying the first supply signal to the at least one supply terminal of the linear amplification means, where the first amplification means comprises

first control means for generating a first control signal based on the input signal,

first switch means for generating a first pulsed power signal based on the first control signal, and

first filter means for filtering the first pulsed power signal to obtain the first supply signal, the first filter means comprising a first filter inductor and a first filter capacitor; and

first active damping means for damping perturbations in the first filter means; wherein

the first active damping means damps perturbations in the first filter means based on a current through the first filter capacitor.

2. The amplifier system as recited in claim **1**, further comprising first compensation means for compensating at least in part for the frequency response of the damped first filter means.

3. The amplifier system as recited in claim **1**, in which the linear amplification means comprises first and second supply terminals and the first supply signal is applied to the first supply terminal, the amplifier system further comprising

second amplification means for generating a second supply signal and applying the second supply signal to the second supply terminal of the linear amplification means, where the second amplification means comprises

second control means for generating a second control signal based on the input signal,

second switch means for generating a second pulsed power signal based on the second control signal, and

second filter means for filtering the second pulsed power signal to obtain the second supply signal, the second filter means comprising a second filter inductor and a second filter capacitor; and

second active damping means for damping perturbations in the second filter means.

4. The amplifier system as recited in claim **3**, further comprising:

first compensation means for compensating at least in part for the frequency response of the damped first filter means; and

second compensation means for compensating at least in part for the frequency response of the damped second filter means.

5. The amplifier system as recited in claim **4**, further comprising discharge means for discharging the first and second filter capacitors to prevent floating of the first and second supply voltages.

6. The amplifier system as recited in claim **3**, in which the first active damping means damps perturbations in the first filter means based on a current through the first filter capacitor and the second active damping means damps perturbations in the second filter means based on a current through the second filter capacitor.

7. The amplifier as recited in claim **3**, in which the first active damping means damps perturbations in the first filter means by altering the first control signal and the second active damping means damps perturbations in the second filter means by altering the second control signal.

8. The amplifier system as recited in claim **2**, in which the first compensation means compensates for the damped first filter means by altering the first control signal.

9. The amplifier as recited in claim **4**, in which the first compensation means compensates for the damped first filter means by altering the first control signal and the second compensation means compensates for the damped second filter means by altering the second control signal.

10. A method of amplifying an input signal to obtain an amplified output signal, comprising the steps of:

generating a first control signal based on the input signal;

operating a switch based on the first control signal to obtain a pulsed power signal;

filtering the pulsed power signal with an output filter to obtain the output signal;

altering the first control signal to damp perturbations in the output filter; and

generating a second control signal based on a current through an output capacitor in the output filter, in which the step of altering the first control signal comprises the step of altering the first control signal based on the second control signal.

11. A method as recited in claim **10**, further comprising the step of altering the first control signal to compensate at least in part for the frequency response of the damped output filter.

12. A method as recited in claim **10**, in which the step of generating the first control signal comprises the step of summing the input signal with a feedback signal derived from the output signal to obtain a voltage loop error signal, the first control signal being generated based on the voltage loop error signal.

13. A method as recited in claim **12**, in which the step of altering the first control signal based on the second control signal comprises the step of adding the voltage loop error signal to the second control signal to obtain a current damping loop error signal, the first control signal being generated based on the current damping loop error signal.

14. A method as recited in claim **13**, further comprising the step of modulating the current damping loop error signal based on a periodic signal to obtain the first control signal.

15. A method as recited in claim **14**, further comprising the step of altering the voltage loop error signal to compensate at least in part for the frequency response of the damped output filter.

16. An amplifier that generates an output signal based on an input signal, comprising:

control means for generating a control signal based on the input signal and a voltage loop feedback signal derived from the output signal;

switch means for generating a pulsed power signal based on the control signal;

output filter means for filtering the pulsed power signal to obtain the output signal, the output filter means comprising a filter inductor and a filter capacitor;

active damping means for damping perturbations in the output filter means, where the active damping means damps perturbations based on a current in the filter capacitor.

17. An amplifier as recited in claim **16**, further comprising compensation means for compensating at least in part for the damped filter means.

18. An amplifier as recited in claim **16**, in which the control means comprises means for summing the voltage loop feedback signal with the input signal to obtain a voltage loop error signal.

19. An amplifier as recited in claim 18, in which the active damping means comprises:

means for generating a current damping loop feedback signal corresponding to the current within the filter capacitor; and

means for altering the control signal by summing the voltage loop error signal with the current damping loop feedback signal to obtain a current damping loop error signal.

20. An amplifier as recited in claim 19, further comprising modulator means for modulating the current damping loop error signal based on a periodic signal to obtain the control signal.

21. An amplifier that generates an output signal based on an input signal, comprising:

control means for generating a control signal based on the input signal and a feedback signal derived from the output signal;

switch means for generating a pulsed power signal based on the control signal;

output filter means comprising an output inductor and an output capacitor for filtering the pulsed power signal to obtain the output signal;

active damping means for damping perturbations in the output filter means; and

compensation means for compensating at least in part for the damped output filter means; wherein

the control means comprises means for summing the voltage loop feedback signal with the input signal to obtain a voltage loop error signal.

22. An amplifier as recited in claim 21, in which the active damping means comprises:

means for generating a current damping loop feedback voltage corresponding to the current within the filter capacitor; and

means for altering the control signal by summing the voltage loop error signal with the current damping loop feedback signal to obtain a current damping loop error signal.

23. An amplifier as recited in claim 22, further comprising modulator means for modulating the current damping loop signal based on a periodic signal to obtain the control signal.

24. An amplifier as recited in claim 23, in which the compensating means comprises means for altering the voltage loop error signal to compensate for the frequency response of the damped filter.

25. In a switch mode amplifier system having

a first feedback loop for generating a control signal based on an input signal and a voltage loop feedback signal derived from an output signal of the amplifier;

switching means for generating a pulsed power signal based on the control signal; and

an output filter having an inductor and a capacitor, where the output filter contributes first and second poles to the amplifier system that lie in the left half of the s-plane adjacent to the imaginary axis, where the first pole is spaced above real axis and the second pole is spaced below the real axis;

a method of stabilizing the amplifier system comprising the steps of actively damping the output filter such that the first and second poles are moved away from the right half of the s-plane and substantially onto the real axis and forward compensating at least in part for the frequency response of the actively damped output filter by providing circuitry that contributes first and second zeros to the amplifier system, where the first zero substantially cancels the first pole and the second zero substantially cancels the second pole.

26. An amplifier system for generating an output signal based on an input signal comprising:

linear amplification means for amplifying an input signal to obtain an amplified output signal, the linear amplification means having at least one supply terminal;

first amplification means for generating a first supply signal and applying the first supply signal to the at least one supply terminal of the linear amplification means, where the first amplification means comprises

first control means for generating a first control signal based on the input signal,

first switch means for generating a first pulsed power signal based on the first control signal, and

first filter means for filtering the first pulsed power signal to obtain the first supply signal, the first filter means comprising a first filter inductor and a first filter capacitor; and

first active damping means for damping perturbations in the first filter means; wherein

the first active damping means damps perturbations in the first filter means by altering the first control signal.

27. A method of amplifying an input signal to obtain an amplified output signal, comprising the steps of:

generating a first control signal based on the input signal;

operating a switch based on the first control signal to obtain a pulsed power signal;

filtering the pulsed power signal with an output filter to obtain the output signal;

altering the first control signal to damp perturbations in the output filter; wherein

the step of generating the first control signal comprises the step of summing the input signal with a feedback signal derived from the output signal to obtain a voltage loop error signal, the first control signal being generated based on the voltage loop error signal.

* * * * *

UNITED STATES PATENT AND TRADEMARK OFFICE

CERTIFICATE OF CORRECTION

PATENT NO. : 5,543,753

DATED : Aug. 6, 1996

INVENTOR(S) : Robert C. Williamson

It is certified that error appears in the above-indentified patent and that said Letters Patent is hereby corrected as shown below:

Column 3, line 18, "powers" should read --power--.

Column 4, line 36, "the the" should read --the--.

Column 5, lines 45-46, "the the" should read --the--.

Column 8, line 52, "art" should read --are--.

Column 11, line 25, "424" should read --422--.

Column 12, line 38, delete "the", first occurrence.

Column 12, line 39, "complete complete" should read --complete--.

Column 12, line 57, "forgoing" should read --foregoing--.

UNITED STATES PATENT AND TRADEMARK OFFICE

CERTIFICATE OF CORRECTION

PATENT NO. : 5,543,753
DATED : Aug. 6, 1996
INVENTOR(S) : Robert C. Williamson

It is certified that error appears in the above-indentified patent and that said Letters Patent is hereby corrected as shown below:

Column 4, line 1, "lot" should read --low--.
Column 4, line 13, "no" should read --to--.

Signed and Sealed this

Seventh Day of January, 1997

Attest:

Attesting Officer

BRUCE LEHMAN

Commissioner of Patents and Trademarks