CARVER

MD/A-420 Compact Disc Player
SERVICE MANUAL

CONTENTS Page

SAFETY INFORMATION 2
SPECIFICATION 3
EXPLODED VIEW OF CABINET 4
EXPLODED VIEW OF MECHANISM 5
EXPLODED PARTS LIST (CABINET) 6
EXPLODED PARTS LIST (FEED MECHA ASS'Y) 7
EXPLODED PARTS LIST (TRANSPORT MECHA ASS'Y) 8
ALIGNMENT AND ADJUSTMENT 9
REPLACEMENT OF MECHANISM PARTS 12
DESCRIPTION OF INTERFACE 14
IC SIGNAL FLOW, EQUIVALENT CIRCUIT 16
BLOCK DIAGRAM 20
WIRING DIAGRAM 21
P.C. BOARD 22
SCHEMATIC DIAGRAM 24
TROUBLESHOOTING 25
ELECTRICAL PARTS LIST 35

SAFETY INFORMATION

WARNING.

Any person performing the procedures described in this manual will be exposed to hazardous voltages and the risk of electric shock.

Carver Corporation assumes that any person who removes the cover from the unit has been properly trained in protecting against avoidable injury and shock.

Therefore, the procedures described here are to be performed by qualified electronics service personnel only.

We recommend that the unit be tested only when line isolation is provided by an isolation transformer. The line cord of the unit must be disconnected and the power supply fully discharged before any components are replaced. Failure to do so may result in severe damage to the unit and the risk of electric shock.

The safety tests described below must be performed properly.

CAUTION:

Before returning the unit to the customer, one of the following safety tests must be performed.

1. Check the leakage current. Connect the unit to 120 VAC supply and turn the power switch "ON". Using an ammeter, measure the current between the neutral side of the AC supply and chassis ground of the unit under test. If leakage current exceeds 0.5mA, the unit is defective. Reverse the polarity of the AC supply and repeat.
2. Measure the resistance from either side of the linecord to chassis ground. If it is less than 500kohms, the unit is defective.

WARNING - DO NOT return the unit to the customer if it fails one of these tests until the problem is located and corrected.

CAUTION

The lightning flash with arrowhead symbol within an equilateral triangle is intended to alert the user to the presence of uninsulated "dangerous voltage" within the product's enclosure, that may be of sufficient magnitude to constitute a risk of electric shock to persons.

The exclamation point within an equilateral triangle is intended to alert the user of the presence of important operating and maintenance (servicing) instructions in the literature accompanying the appliance.

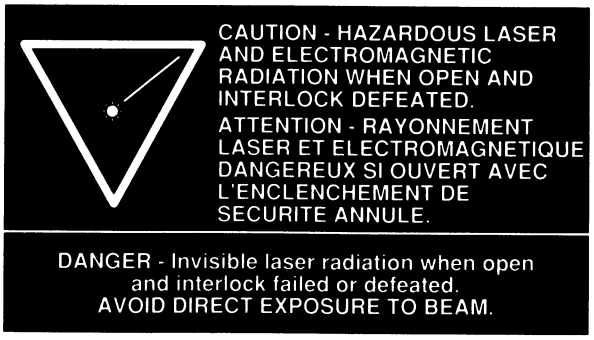

SPECIFICATIONS

AUDIO SPECIFICATIONS

Number of Channels	2
Signal/Noise Ratio	>100dB
Harmonic Distortion	<.0035%
Frequency Response	20Hz-20KHz ± .5dB
Channel Response	>95dB (at 1KHz)
Wow/Flutter	Not measurable
Output Voltage	2.1V (TYP)

SIGNAL FORMAT

Sampling Frequency	352.8 KHz (44.1 KHz × 8)
Error Correction System	CIRC double error correction system
D/A Conversion	18 bit linear 2 DAC system

GENERAL SPECIFICATION

Power Requirements	100-120V (50-60Hz); 220-240V (50-60Hz) EX
Power Consumption	10 Watts
Dimension (W × H × D)	19″ × 3.9″ × 12″ (482.6 × 99 × 304.8 mm)
Weight	9.2 lbs (4.18 kg)

PERFORMANCE SPECIFICATIONS

	NOMINAL	LIMIT
Output Level	2.1V ± 0.2V	2.1V ± 0.4V
Channel Unbalance	±0.2dB	±0.5dB
Frequency Response		
20KHz	±0.2dB	±0.5dB
10KHz	±0.2dB	±0.6dB
20KHz	±0.5dB	±1.0dB
Signal to Noise Ratio	105dB	95dB
Channel Separation		
1KHz	95dB	85dB
10KHz	90dB	80dB
Total Harmonic Distortion		
1KHz	0.0035%	0.006%
10KHz	0.0035%	0.008%
20KHz	0.005%	0.01%
Dynamic Range	95dB	85dB

PICK UP

Type	Astigma 3 beam
Light Source	Semiconductor laser
Wave Length	780nm

ACCESSORIES

Phone Cord
Instruction Manual

** * *NOTE:*
Nominal Specs represent the design specs; all units should be able to approximates these . . . some will exceed and some may drop slightly below these specs. Limit specs represent the absolute worst condition that still might be considered acceptable; in no case should a unit perform to less than within any limit spec.

EXPLODED VIEW OF CABINET

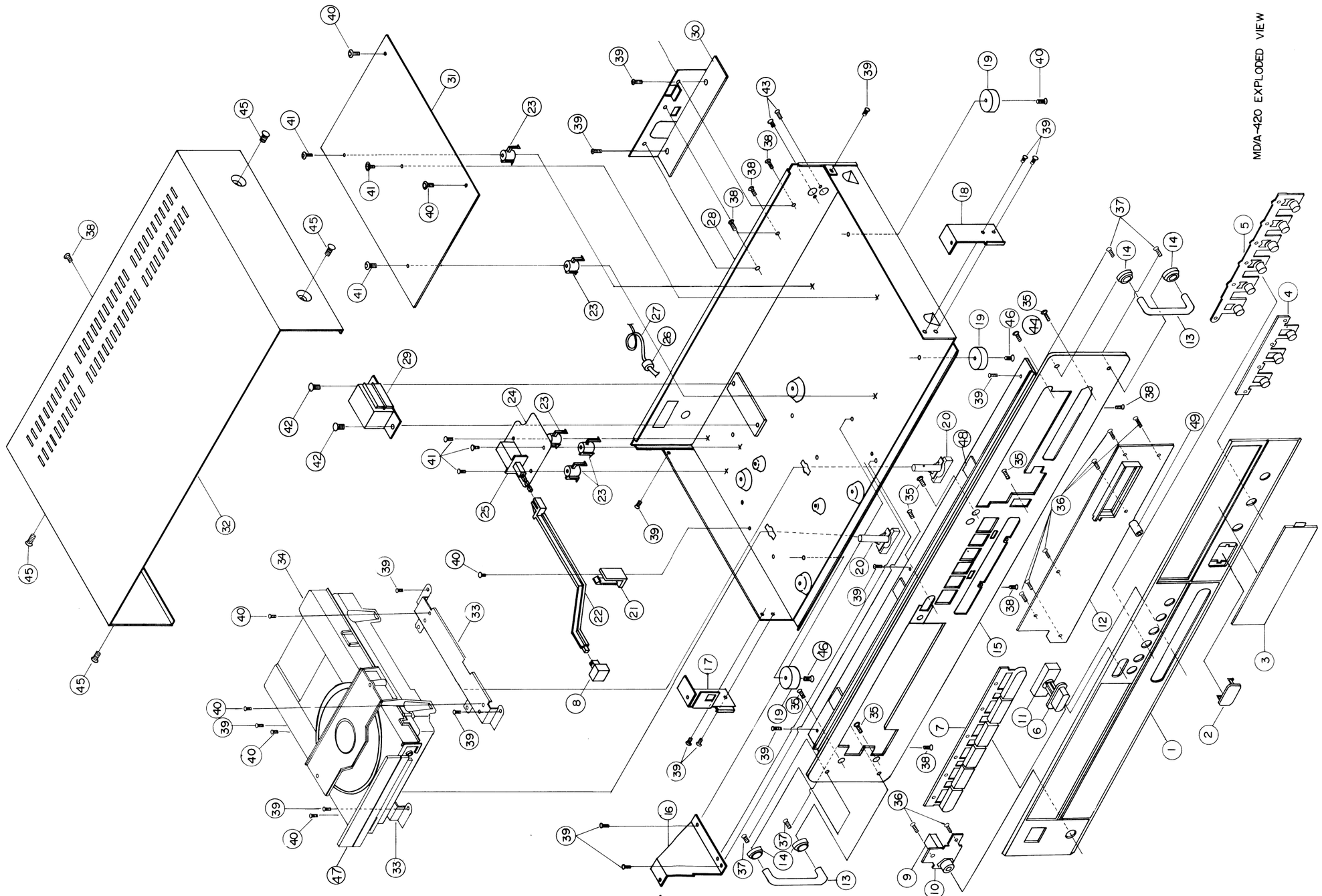

EXPLODED VIEW OF MECHANISM

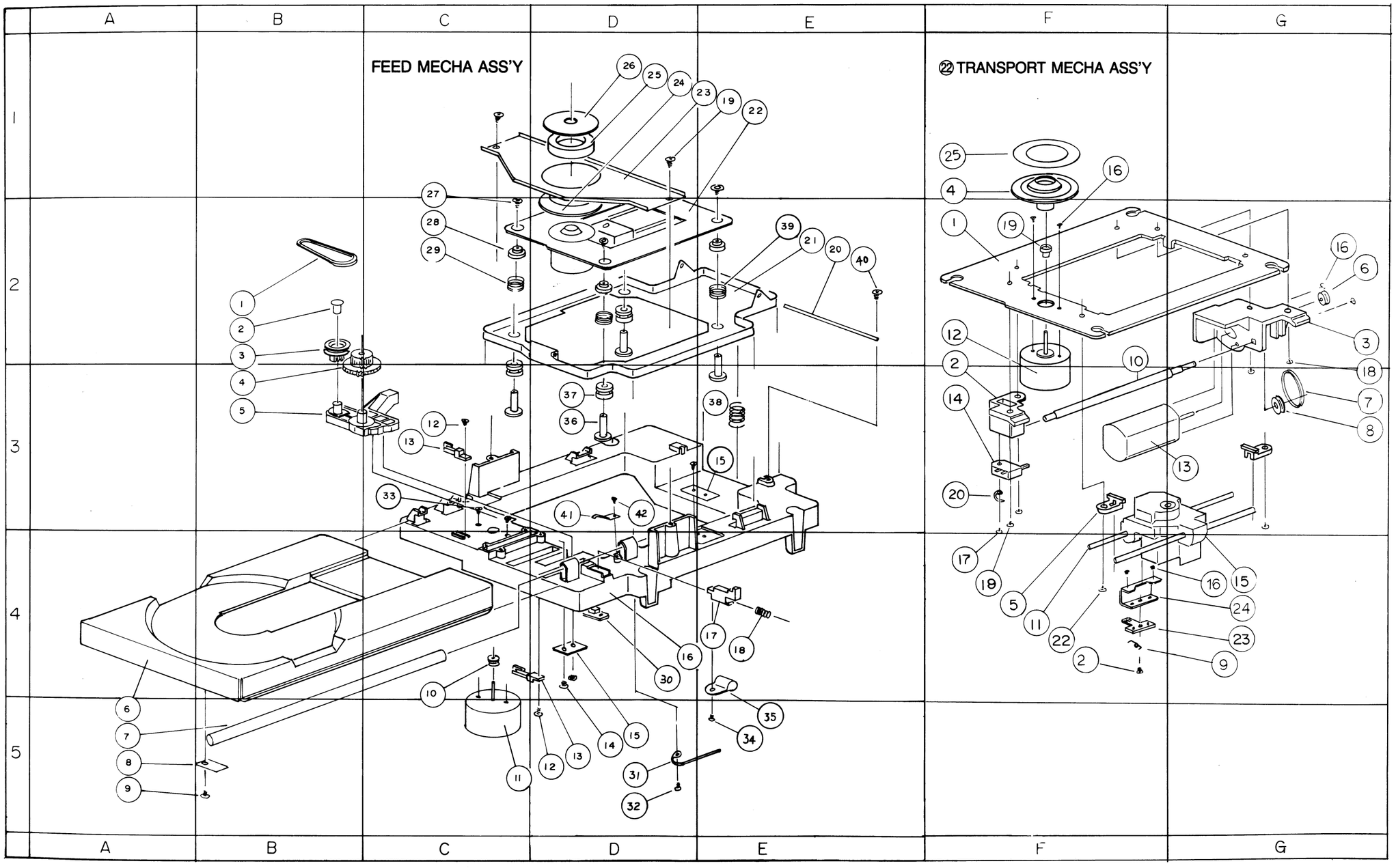

EXPLODED PARTS LIST (CABINET)

REF NO.	PART NAME	Q'TY	PART NO.
1	FRAME, PANEL	1	CO2810A1
2	WINDOW, REMOCON	1	CW5560H1
3	WINDOW, DISPLAY	1	CW5550H1
4	BUTTON, REPEAT	1	CK4970A1
5	BUTTON, PROGRAM	1	CK4960A1
6	BUTTON, OPEN/CLOSE	1	CK4940A1
7	BUTTON, CONTROL	1	CK4950A1
8	BUTTON, POWER	1	CK4930A1
9	HEADPHONE JACK	1	NE0340S2
10	BRACKET, PHONE	1	EC3160L1
11	CUSHION, BUTTON	1	GC2170S1
12	PCB, PANEL	1	WP4087D1
13	HANDLE	2	CJ0310N1
14	BUSHING, HANDLE	2	CJ0320N1
15	PANEL, FRONT	1	CO2790N1
16	SUPPORT "CENTER"	1	DO0030L5
17	SUPPORT "L"	1	DO0320L0
18	SUPPORT "R"	1	DO0310L4
19	FOOT	4	GF0520R1
20	HOLDER, MECHA	2	DH1760A1
21	HOLDER, LINK POWER	1	DH1320A2
22	LINK POWER	1	GL0230A8
23	SUPPORT P C B	6	DO0300A2
24	P C B FUSE	1	OP0855D7
25	S/W PUSHL	1	SP0138G0
26	STOPPER, AC CORD	1	DS0420A8
27	CORD, AC	1	⚠ JC0038K7
28	MAIN CHASSIS	1	CG0790L4
29	TRANS, POWER, 100-120V	1	⚠ MO4809N6
	TRANS, POWER, 220-240V	1	⚠ MD4801Y1
30	DIGITAL OUT PCB ASS'Y	1	WP4147D2
31	P C B MAIN	1	WP4144D8
32	COVER, UPPER	1	ED0330L1
33	BRACKET MECHA	2	EC3150L1
34	MECHANISM	1	WW4081D3
35	SCREW TAP WPH +2S 3×5 BK	6	HB6053W1
36	SCREW TAP WPH +2S 3×8	8	HB6081W5
37	SCREW TAP WPH +3S 4×8 BK	4	HC8083W1
38	SCREW TAP BH +3S 3×8 BK	7	HE6083B7
39	SCREW TAP BH +3S 3×5	16	HE6051B5
40	SCREW TAP BH +3S 3×8	7	HC6081B1
41	SCREW TAP WPH +2S 3×14	6	HB6141W6
42	SCREW TAP BH +3S 4×6	2	HC8061B5
43	SCREW TAP BH +2S 3×10 BK	2	HB6103B0
44	SCREW TAP WPH +2S 3×4 BK	1	HB6043W1
45	SCREW TAP BH +3S 4×6 BK	4	HC8063B1
46	SCREW TAP BH +3S 3×10	4	HC6101B0
47	COVER, TRAY	1	CO2800A1
48	CUSHION, PANEL	3	GC2160R1
49	CYLINDER, PANEL	2	DC0200F1

EXPLODED PARTS LIST (FEED MECHA ASS'Y)

REF NO.	DESCRIPTION	SPEC	PART NO.	POSITION
1	BELT TRAY	WRT 50°	GB0390R6	B2
2	STOPPER GEAR	ACETAL	DS0660G7	B2
3	GEAR PULLEY	HYTRELL	DG0700G1	B2
4	GEAR TRAY	ACETAL	DG0710G6	B3
5	HOLDER	ACETAL	DH1700G4	B3
6	TRAY	ABS	DZ0400A6	B4
7	PIPE TRAY	BSBM	GP0630M4	B5
8	B.K.T PIPE	SECC T1.0	EC2970L0	B5
9	SCREW	TAP 2.6×8	HB5081B7	B5
10	PULLEY MOTOR	ACETAL	DQ0210G5	C4
11	MOTOR TRAY	MABUCHI RF500TB	JM0388M7	C5
12	SCREW	TAP 2.2×6	HB4061B8	C3, D3, D5
13	S/W	MIC MSW0094 CNBK	SL0086M6	C3, D4
14	SCREW	TAP 2×6	HB3061B1	D4
15	B.K.T ROLLER	SECC T1.2	EC2960L4	D4
16	MECHA TRAY	A.B.S	DB0370A8	D3
17	STOPPER TRAY	ACETAL	ES0560G7	E4
18	SPRING STOPPER	SUS 304	GS3070O3	E4
19	SCREW	TAP 3×8	HB6083B1	C1, D1
20	SHAFT FEED	BSBM	FS2150M7	E2
21	B.K.T FEED	SECC T1.0	EC2980L5	D2
22	TRANSPORT MECHA ASS'Y		WW0027D5	D2
23	FLAPPER	AL T1.6	EZ0350O1	D1
24	CLAMPER	ACETAL	DS0570C6	D2
25	MAGNET CORE	FERRITE 6	GZ1130L7	D1
26	PLATE CLAMPER	SECC T1.0	EP0990L7	D1
27	SCREW FEED	TAP 2.2×8	HZ1150L1	C2, D1, D2, E1
28	BUSHING INSULATOR	ACETAL	DC0140G1	C3, D2, E2
29	SPRING A	SUS304	GS3100O7	C2, D2
30	SPACER STOPPER	ABS	DZ0430A3	D4
31	CORD CLAMP	DALB 2	ES0910Z1	D5
32	SCREW	TAP 2.6×8	HB5081B7	D5
33	SCREW	M 2.6×5	HD5051B2	C3
34	SCREW	TAP 3×8	HB6083B1	E5
35	CABLE CLAMP	SJ 5N	DH2440I1	E4
36	GUIDE INSU	ACETAL	DI0410G7	C3, D2, D3, E2
37	INSULATOR	BUTHYL	GI0970R4	C3, D2, D3
38	SPRING FEED	SUS304	GS3090O4	E3
39	SPRING C	SUS304	GS3060O7	E2
40	SCREW	TAP 3×8	HB6083B1	E2
41	SPRING PIPE	SUS304	GT0730O1	D3
42	SCREW	TAP 3×5	HB6053B4	D3

EXPLODED PARTS LIST (TRANSPORT MECHA ASS'Y)

REF NO.	DESCRIPTION	SPEC	PART NO.	POSITION
1	PLATE MECHA	SECC T1.6	EP0980L2	F2
2	GUIDE S/W	ABS	DI0370A7	F3
3	HOLDER MOTOR	ABS	DH1690A1	G2
4	T/TABL		DU0300A5	F1
5	GUIDE SHAFT	ABS	DI0390A8	F3, G3
6	PULLEY A	ACETAL	DQ0190G6	G2
7	BELT SLED	WRT	GB0380R1	G3
8	PULLEY B	ACETAL	DQ0200G0	G3
9	SPRING GUIDE	SUS304	GT0700O1	F4
10	GEAR SCREW	BSBM	HZ0950M4	F3
11	SHAFT GUIDE	PCB-18	FS2120O7	F4, G3
12	MOTOR SPINDLE	MABUCHI RF310T	JM0250M5	F2
13	MOTOR SLED	MABUCHI RF050SH	JM0398M3	F3
14	SWITCH MICRO	ALPS SPB 11	SM0158A4	F3
15	PICK UP	SANYO SF90JJ	OH0012K4	F3
16	SCREW	M 2×5	HD3051B6	F2, G3, F4
17	SCREW	TAP 2×6	HB3061B1	F3
18	SCREW	TAP 2.6×8	HC5082B1	F3, G2
19	SPACER T/TABLE	ACETAL	DQ0150G4	F2
20	CORD CLAMP II	SPC T0.5	ES1000Z1	F3
21	SCREW	TAP 2.6×8	HD5051B2	F4
22	SCREW	TAP 3×8	HC6081W1	F4
23	GUIDE P/U	HYTRELL	DI0630G1	F4
24	B.K.T P/U	SECC T1.2	EC3940L1	F4
25	PLATE T/TABLE	3M 5560	GT0680U1	F1

ALIGNMENT AND ADJUSTMENT

When you do either (1) or (2), be sure to perform adjustments 1—5.

1) Disassembly of the unit mechanism and replacement of parts.
2) Replacement of the pick up mechanism.

••PRESETTING

Adjustment	Circuit No.	Preset Position
Tracking error offset	VR203	Center
Focus error offset	VR202	Center
Tracking error balance	VR201	Center
Tracking error gain	VR204	Center

••Adjustment should be made in the following sequence.

1. Laser Output Check (disc out)

1) Apply power meter sensor to pickup.
2) Switch Power ON, and check meter during 5 seconds focus search for laser output = 0.18 - 0.5 mW

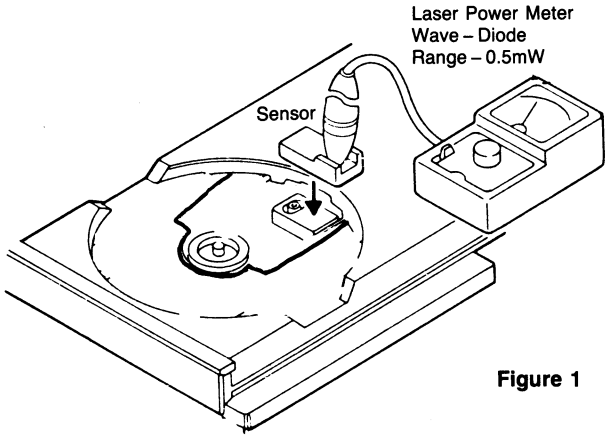

Figure 1

2. Tracking error offset Adjustment

1) Instrument to be used
   - Oscilloscope
2) Adjusting procedure (Figure 2)
   - Connect the oscilloscope to TP8 and HEATSINK (Ground).
   - Load a disc in the player and set the player to stop mode.
   - Adjust VR203 so that the D.C value on the oscilloscope is ZERO.

3. Focus error offset Adjustment

1) Instrument to be used
   - Oscilloscope
2) Adjusting procedure (Figure 2)
   - Connect the oscilloscope to TP7 and HEAT SINK (Ground).
   - Load a disc in the player and set the player to stop mode
   - Adjust VR202 so that the DC value on the oscilloscope is ZERO.

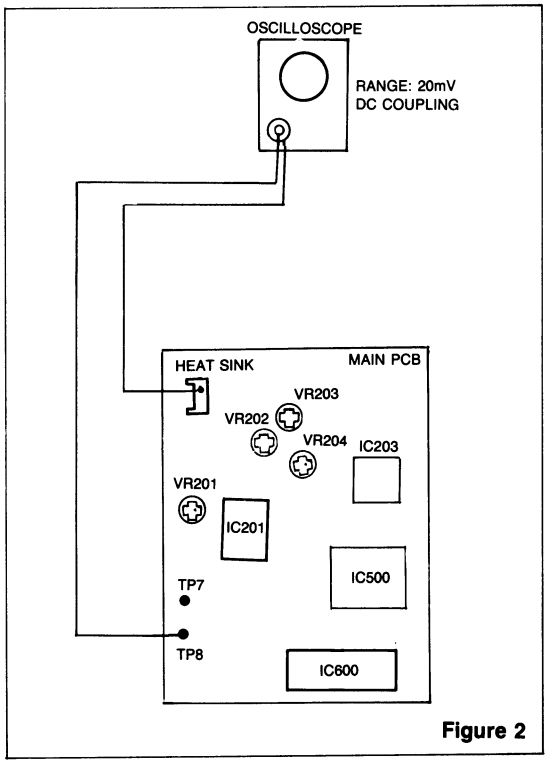

Figure 2

4. Adjustment of PLL

Don't perform this adjustment except when the parts of PLL block have been changed.

1) Instrument to be used
   - Frequency counter

2) Adjusting procedure (Figure 3)
   - Connect the frequency counter to TP11 (CK) and TP10 (GND)
   - Connect a shorting jumper between TP9 (EFM) and TP10 (GND)
   - Adjust VR501 so that frequency counter reads 4.3218MHz.

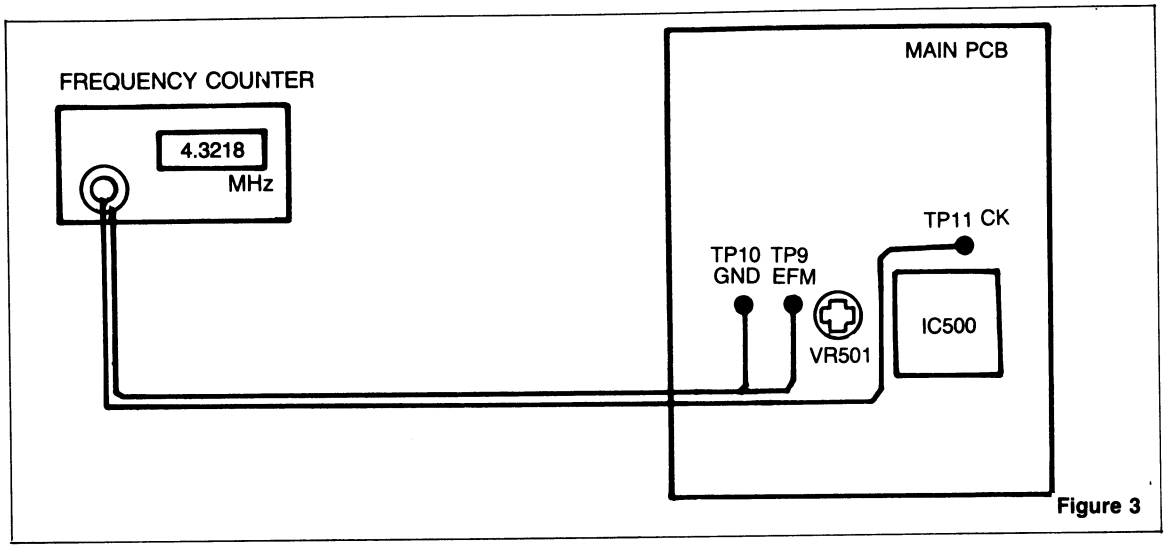

Figure 3

5. Tracking error balance Adjustment

1) Instrument to be used
   - Oscilloscope

2) Adjusting procedure (Figure 5)
   - Connect the oscilloscope to TP3 and HEAT SINK (GND).
   - Connect a shorting jumper between TP4 and GND (TP10)
   - Load a disc in the player, and set the player to play mode.
   - Play mode will end after 5 seconds. Push play again if necessary.
   - Adjust VR201 so that oscilloscope resembles the figure shown in Figure 4, where A = B.

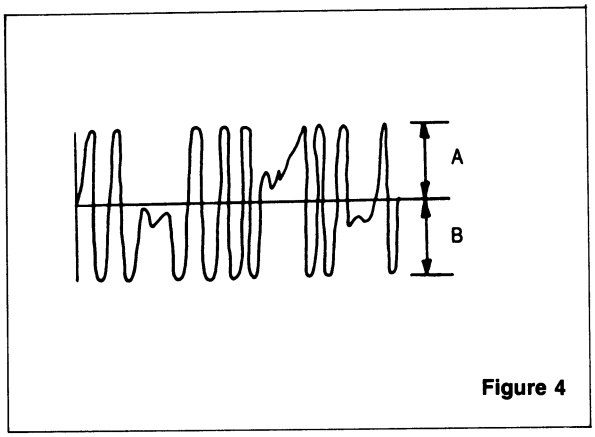

Figure 4

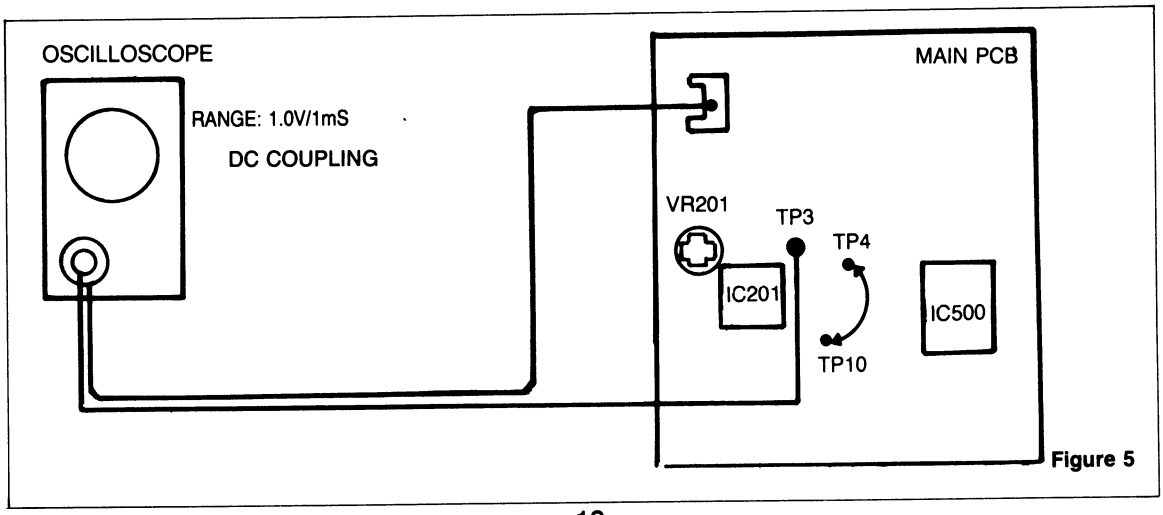

Figure 5

6. Adjustment the Tracking Error Gain

1) Instrument to be used
   - signal generator • oscilloscope
2) Adjusting Procedure (Figure 7)
   - Connect the sine waveform signal generator and the oscilloscope as shown in Figure 7.
   - Adjust the signal generator so that its frequency is 900Hz and its output 2.0Vrms.
   - Adjust VR204 so that the Lissajous figure on the oscilloscope resembles the figure shown in Figure 6.

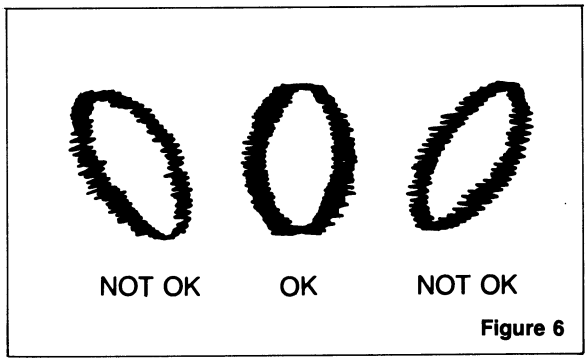

Figure 6

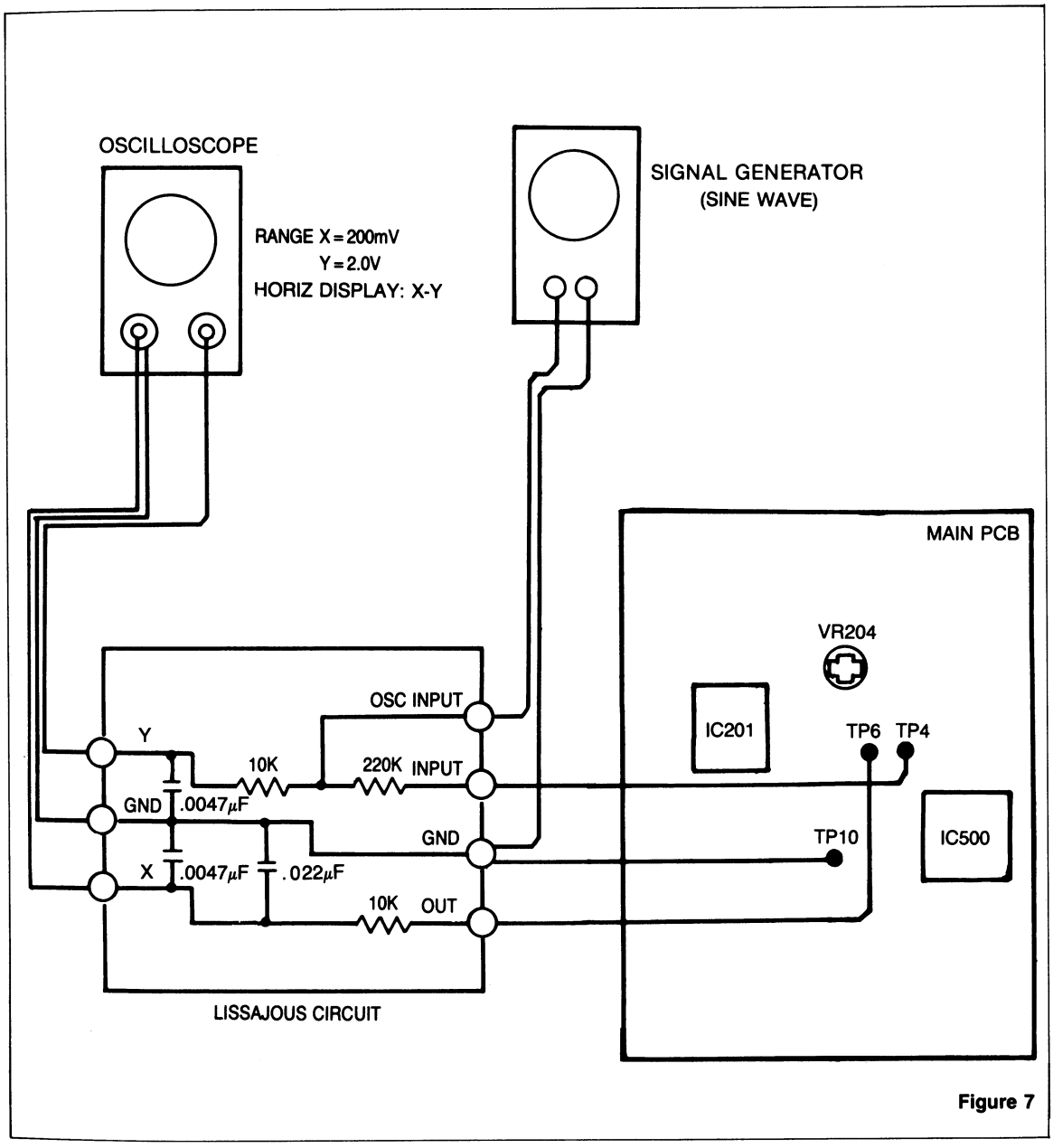

Figure 7

REPLACEMENT OF MECHANISM PARTS

1) Removing the FLAPPER & DISC HOLDER

- Remove the screw (1) 2EA

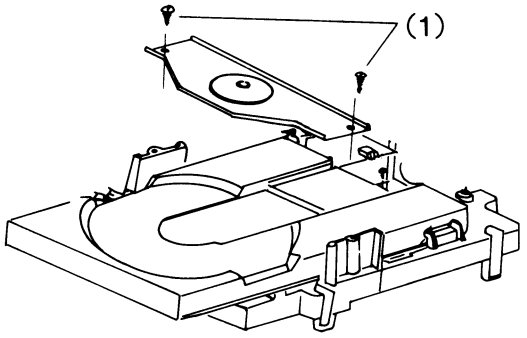

2) Removing the tray

- Remove the screw (2) and pull out the tray.

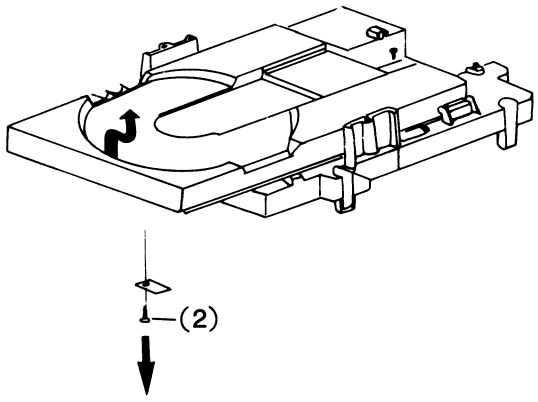

3) Removing the Feed mecha assy

- Remove the screw (1) and pull out the shaft (2)
- Pull out the feed mecha assy upward

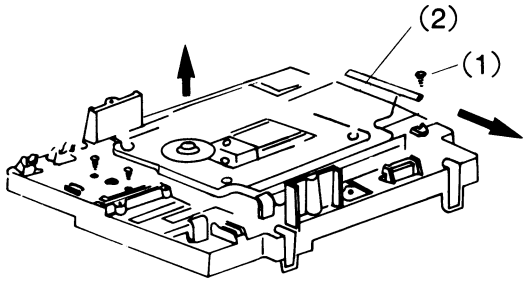

4) Removing the loading motor, belt tray and holder gear.

- Pull out the Belt (1)
- Remove the Screw (2)-2EA
- Remove the Screw (3)-2EA
- Pull out the B.K.T Roller (4) and Holder GEAR (5)
- Pull out the Stopper Gear (6) upward
  Pull out PULLEY GEAR (7) and Gear tray (8)

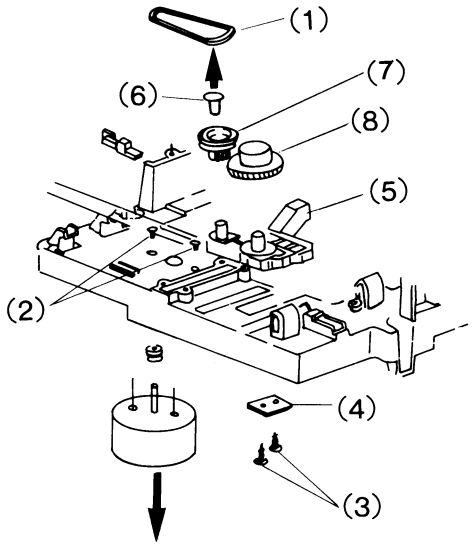

5) Removing the spindle motor and turntable.

- Removing the P.C board below the disc motor.
- Pull out the turntable and spacer.
  Remove two screws (1) and pullout the spindle motor downward.

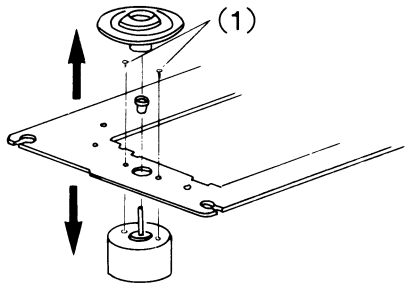

6) Removing the Pick-up

- Remove two Screws (1) and pull out the Guidesw (2) downward.
- Remove two Screws (3) and pull out the Holder Motor (4) downward.
- Remove two Screws (5) and pull out the Guideshaft (6)

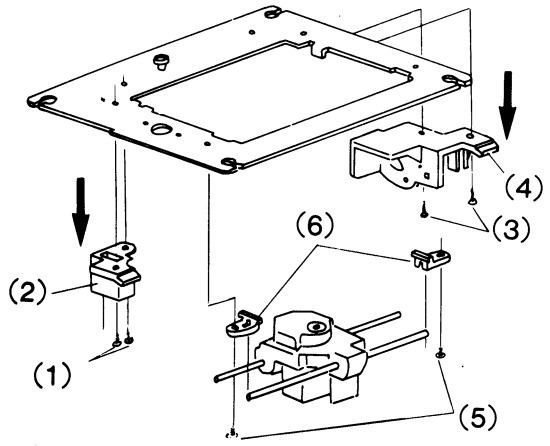

7) Disc motor replacement

- If the disc motor is defective, replace it with a new one as shown in the figure below.

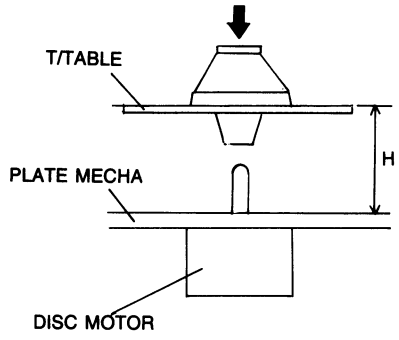

T/TABLE HEIGHT (H): 15.25 ± 0.1 mm

8) Pick up head replacement

1) Remove two screws (2) and pull out the BKT P/U.
2) Replace pick up head with a new one.
3) Reattach the BKT P/U to pickup head.

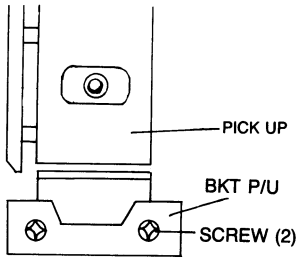

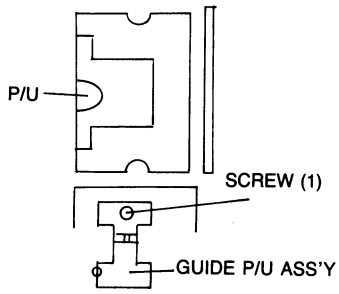

Cautions on Replacement of Pick-up

1. Do not touch the terminals on the pick-up with your hand when removing the laser pick-up.
2. Cover the work bench with a conductive mat which is also grounded.
3. Before proceeding with job, always touch the conductive mat or ground lead with both hands to discharge electric charges developed on your body.
4. To protect your vision do not expose your eyes to the direct laser light. The beam is focused at a distance of 2 mm from the lens.

DESCRIPTION OF INTERFACE: YM-7121 (IC500)

SIGNAL	TIMING AND LEVEL	CONTENTS
FCS FZC FRF FCO	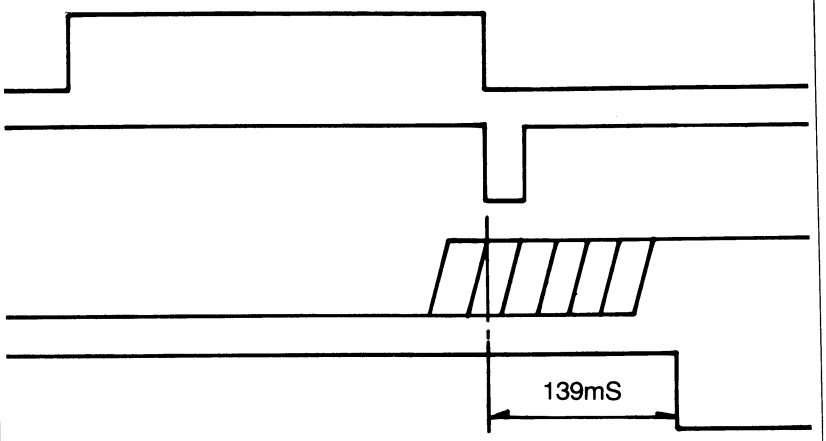	Focus Servo Signal
EFMX CK PDO	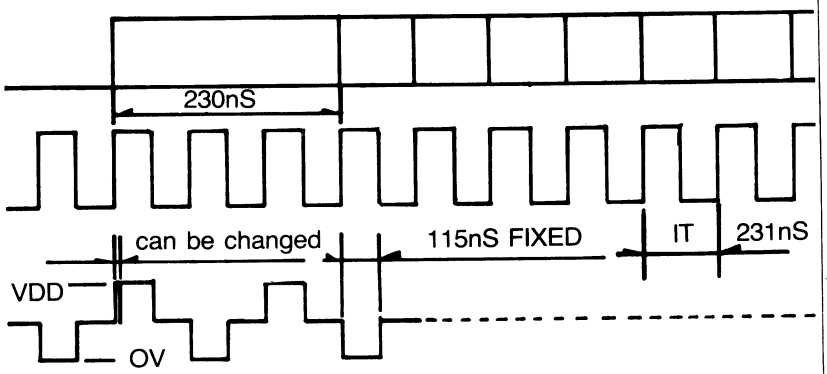	4.3218MHz PDO: PLL Servo phase differentiation detection output
CK DSY DATA	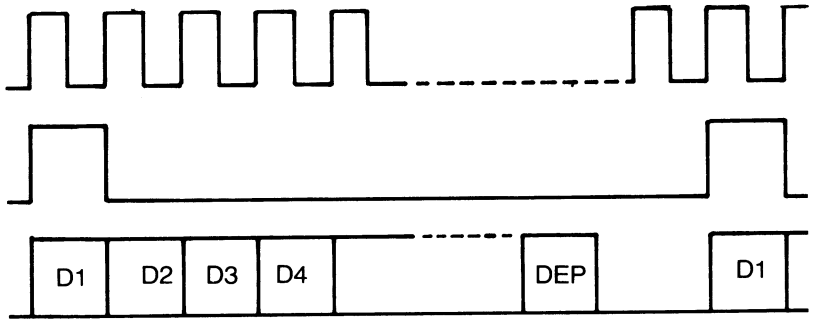	CK: VCO clock Generator
SYEQ	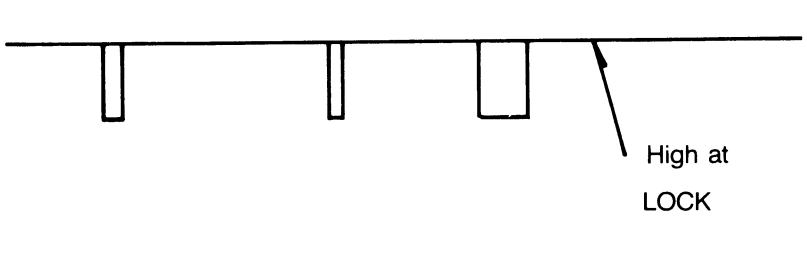	SYEQ: When synchronized between the detection SYNC from EFM and the inner counter SYNC get 'H' output

DESCRIPTION OF INTERFACE: YM-7121

SIGNAL	TIMING AND LEVEL	CONTENTS
DM + DM + (pwm) DM – (pwm) DM –	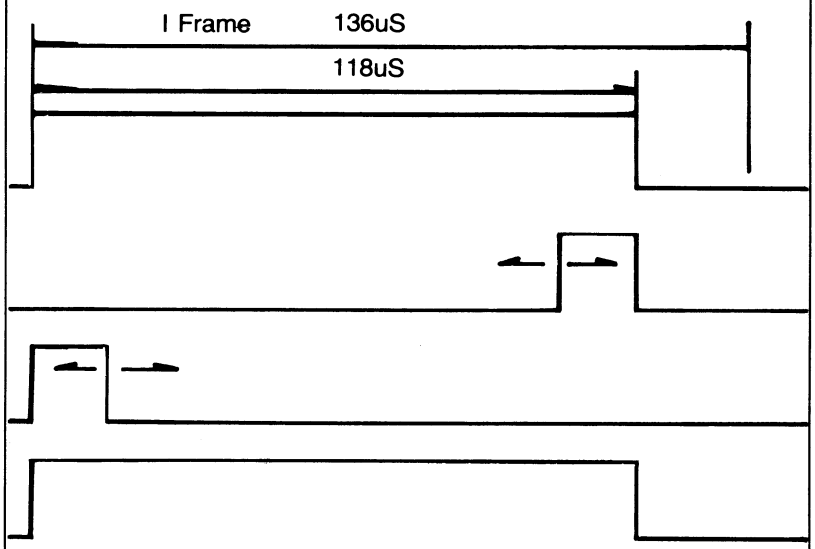	CLV Control Signal
WQ R/W SCK DOUT	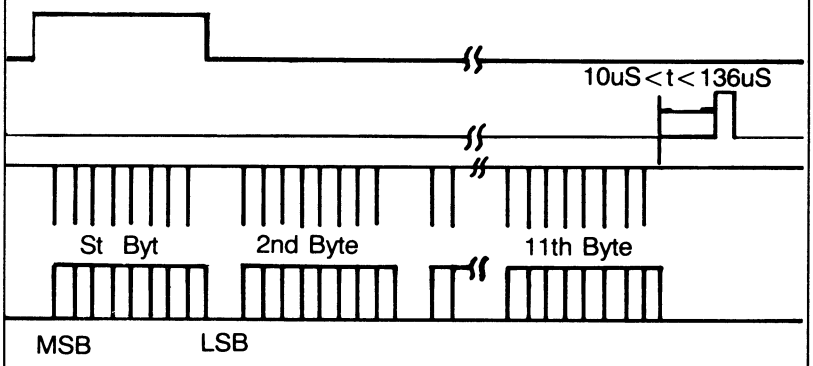	Signal Processor →MICOM data (Qcode output)
R/W SCK DIN	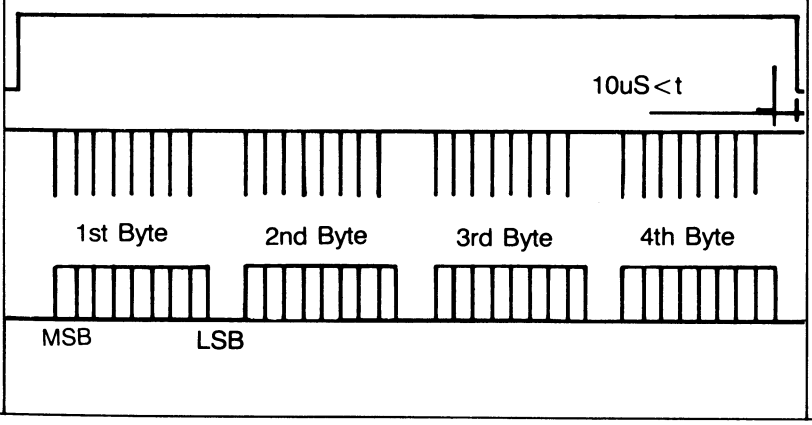	MICOM→ Sig. Processor (MICOM command)

IC SIGNAL FLOW, EQUIVALENT CIRCUIT

CX20109

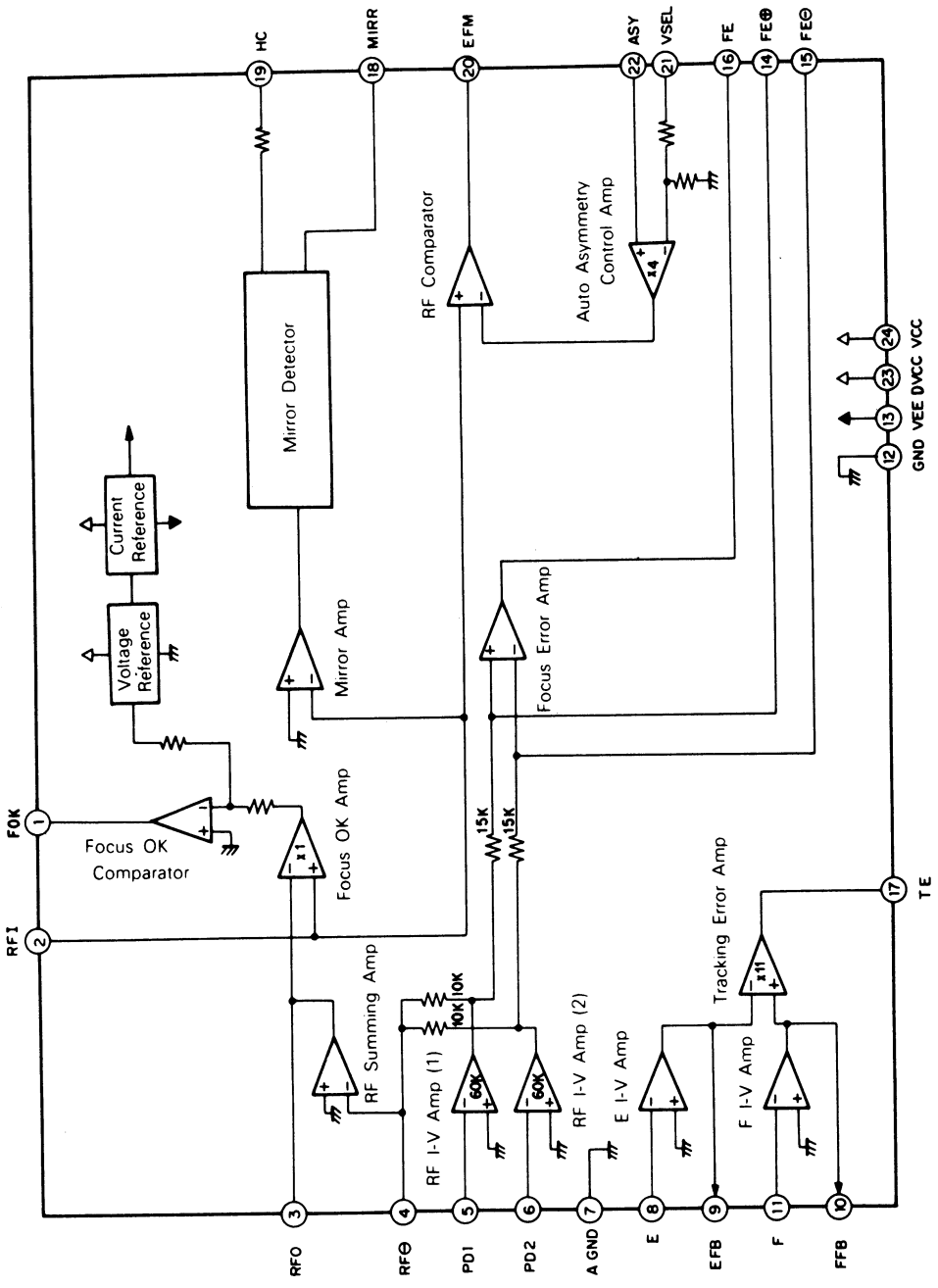

IC SIGNALFLOW, EQUIVALENT CIRCUIT

YM-7121

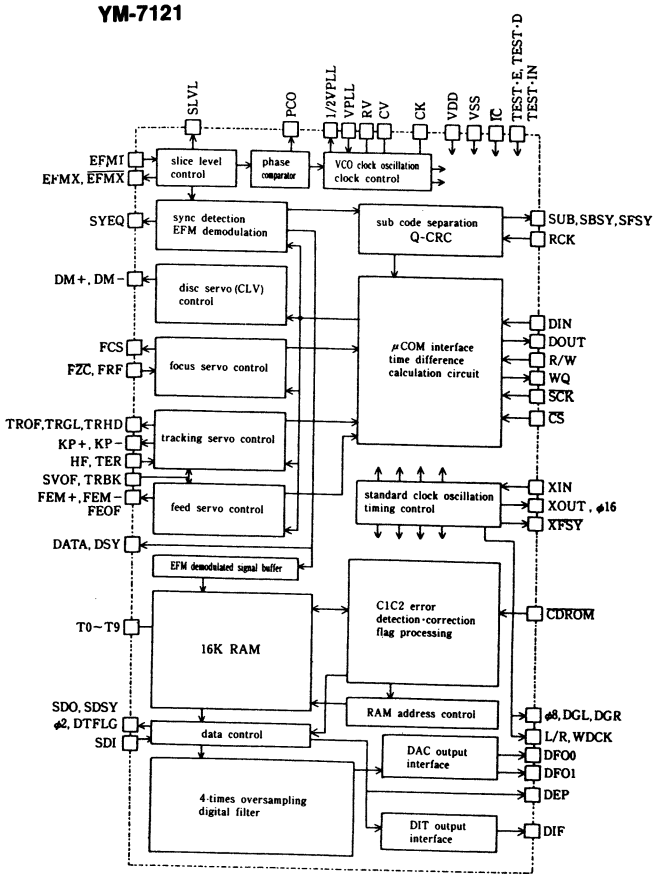

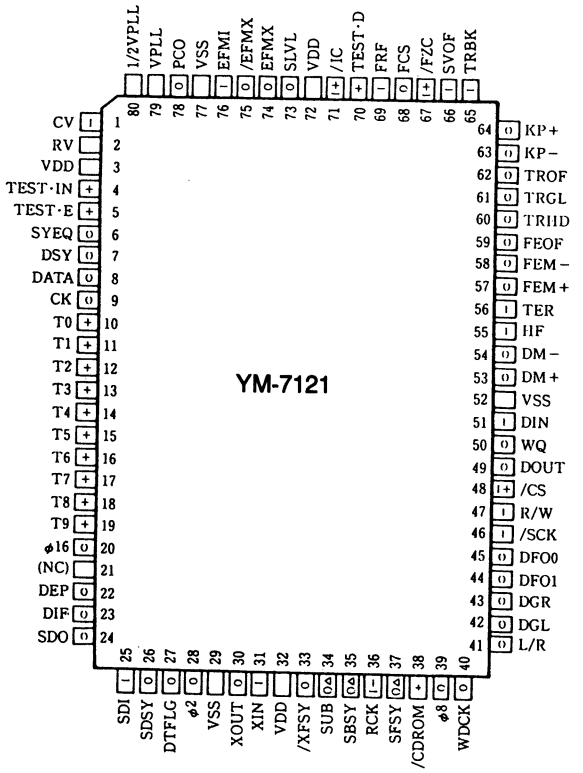

CX20109

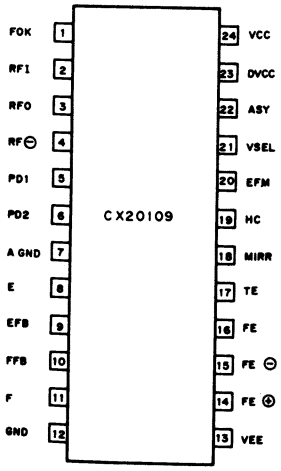

YM-3434

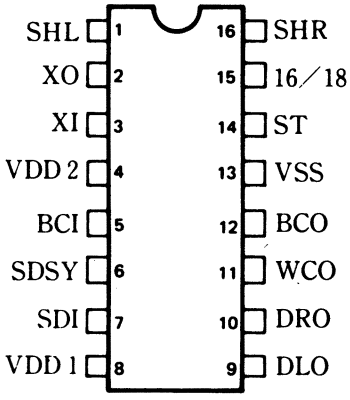

IC SIGNAL FLOW, EQUIVALENT CIRCUIT

YM-3434

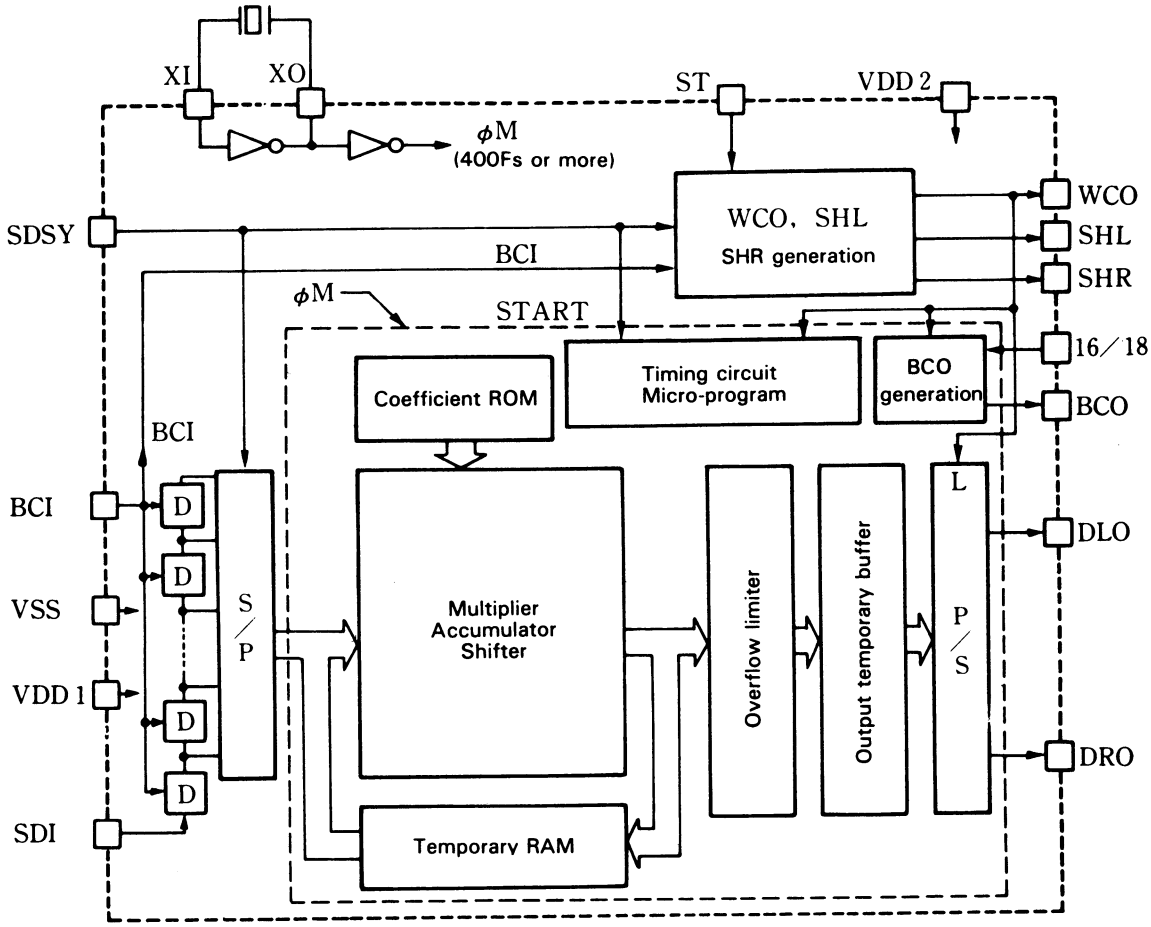

AD1864N-K

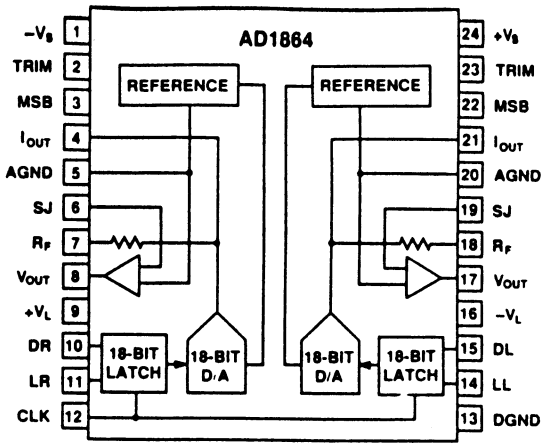

PIN DESIGNATIONS

PIN	SIGNAL	DESCRIPTION
1	$-V_S$	Negative Analog Supply
2	TRIM	Right Channel Trim Network Connection
3	MSB	Right Channel Trim Potentiometer Connection
4	I_{OUT}	Right Channel Output Current
5	AGND	Right Channel Analog Common Pin
6	SJ	Right Channel Amplifier Summing Junction
7	R_F	Right Channel Feedback Resistor
8	V_{OUT}	Right Channel Output Voltage
9	$+V_L$	Positive Digital Supply
10	DR	Right Channel Data Input Pin
11	LR	Right Channel Latch Pin
12	CLK	Clock Input Pin
13	DGND	Digital Common Pin
14	LL	Left Channel Latch Pin
15	DL	Left Channel Data Input Pin
16	$-V_L$	Negative Digital Supply
17	V_{OUT}	Left Channel Output Voltage
18	RF	Left Channel Feedback Resistor
19	SJ	Left Channel Amplifier Summing Junction
20	AGND	Left Channel Analog Common Pin
21	I_{OUT}	Left Channel Output Current
22	MSB	Left Channel Trim Potentiometer Wiper Connection
23	TRIM	Left Channel Trim Network Connection
24	$+V_S$	Positive Analog Supply

IC SIGNAL FLOW, EQUIVALENT CIRCUIT

MSM 6408-50

a) Pin configuration

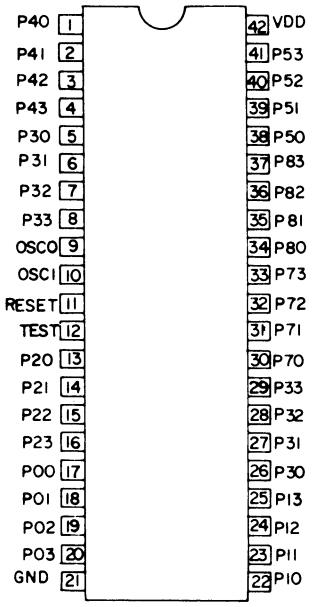

b) Architecture

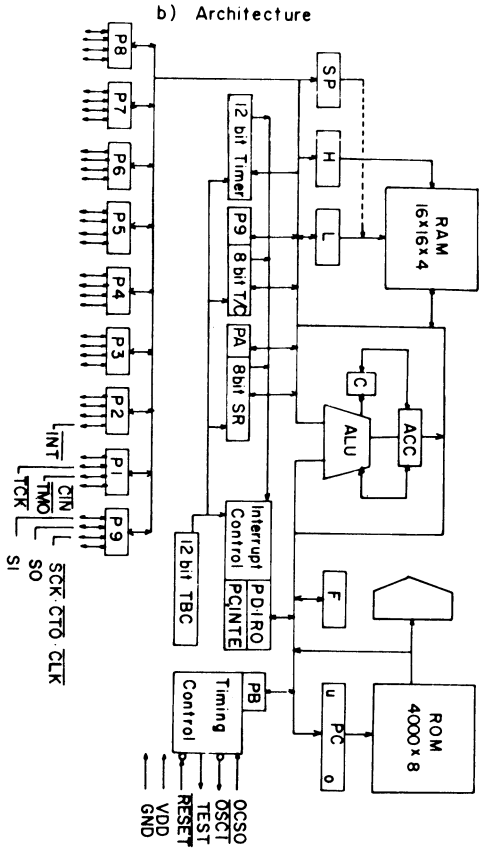

OUTPUT PORT

PIN NO.	PORT NAME	COMMAND NAME
1	P40	DIGIT
2	P41	DIGIT
3	P42	DIGIT
4	P43	DIGIT
5	P30	TRAY IN
6	P31	TRAY OUT
7	P32	LASER ON
18	P01	$\overline{SCK}$
19	P02	DIN
26	P80	KEY
27	P81	KEY
28	P82	KEY
29	P83	KEY
30	P70	SEGMENT
31	P71	SEGMENT
32	P72	SEGMENT
33	P73	SEGMENT
34	P60	SEGMENT
35	P61	SEGMENT
36	P62	SEGMENT
37	P63	SEGMENT
38	P50	DIGIT
39	P51	DIGIT
40	P52	DIGIT
41	P53	DIGIT

INPUT PORT

PIN NO.	PORT NAME	COMMAND NAME
8	P33	WQ
9	OSC 0	4.0MHz
10	OSC 1	
11	RES	RESET
13	P20 (INT)	REMOTE
14	P21	OPENSW
15	P22	CLOSESW
16	P23	FES
17	P00	R/W
20	P03	DOUT
22	P10	KEY SCAN
23	P11	KEY SCAN
24	P12	KEY SCAN
25	P13	KEY SCAN

BLOCK DIAGRAM

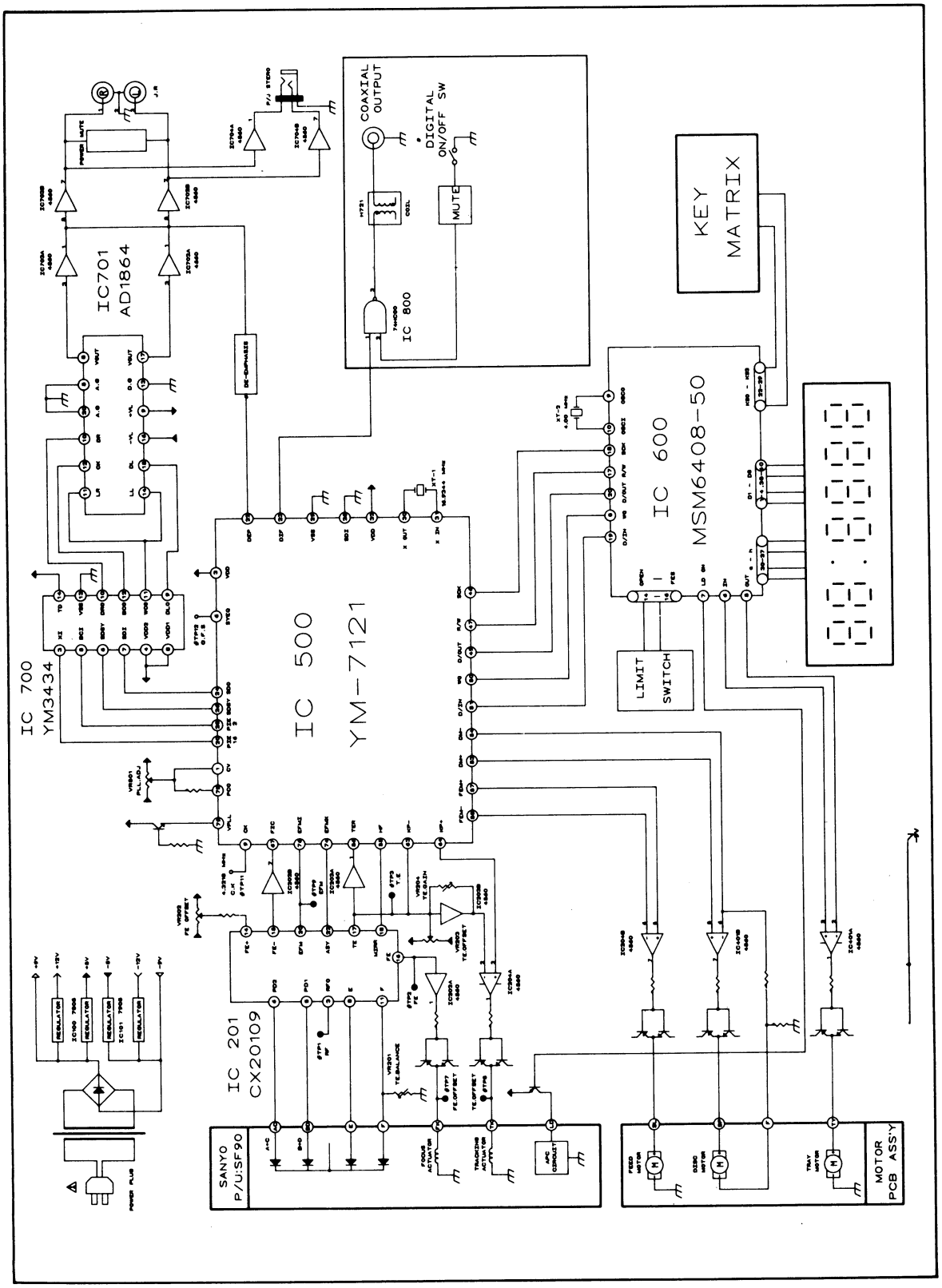

WIRING DIAGRAM

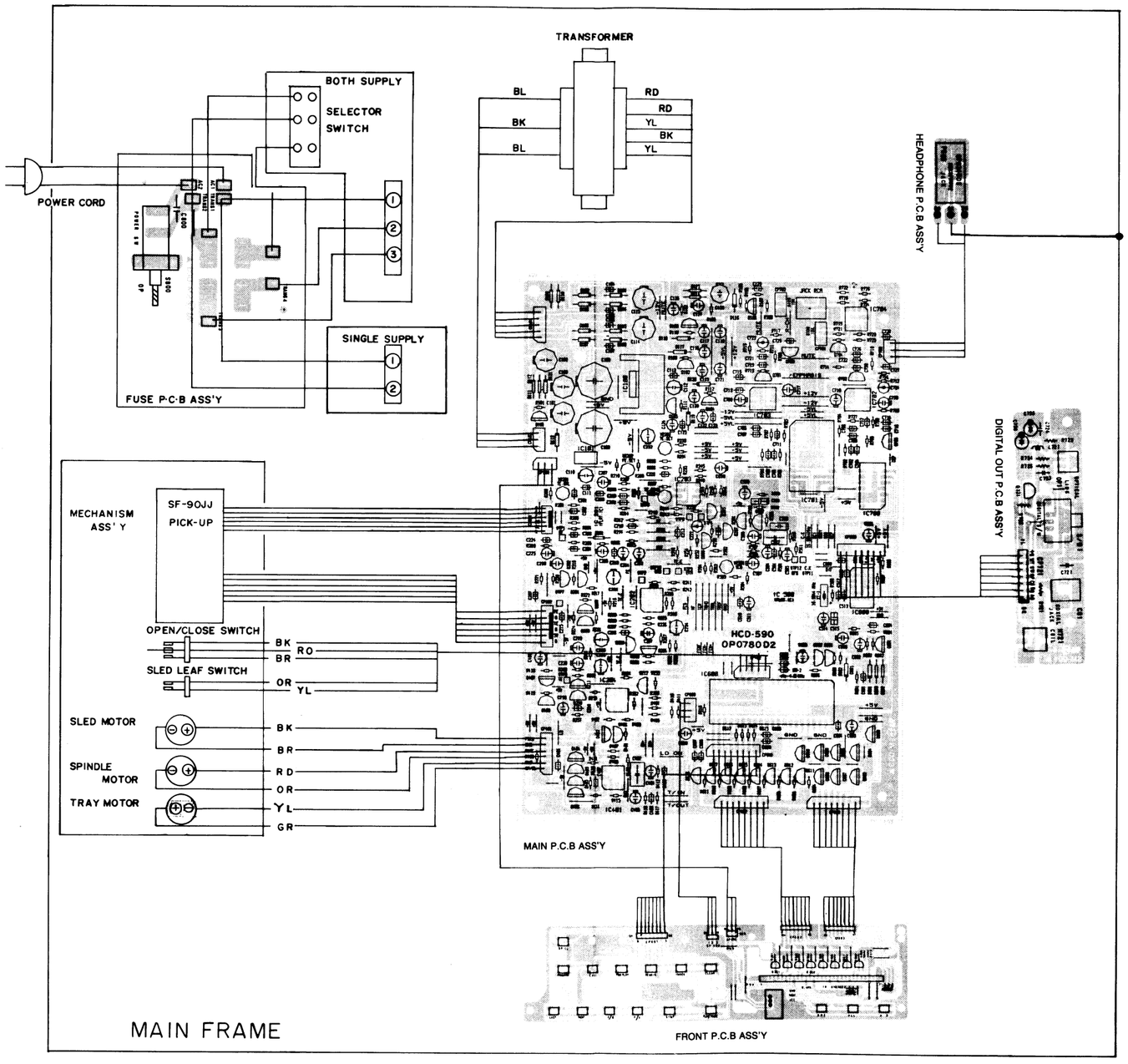

P.C. BOARD

•MAIN PCB

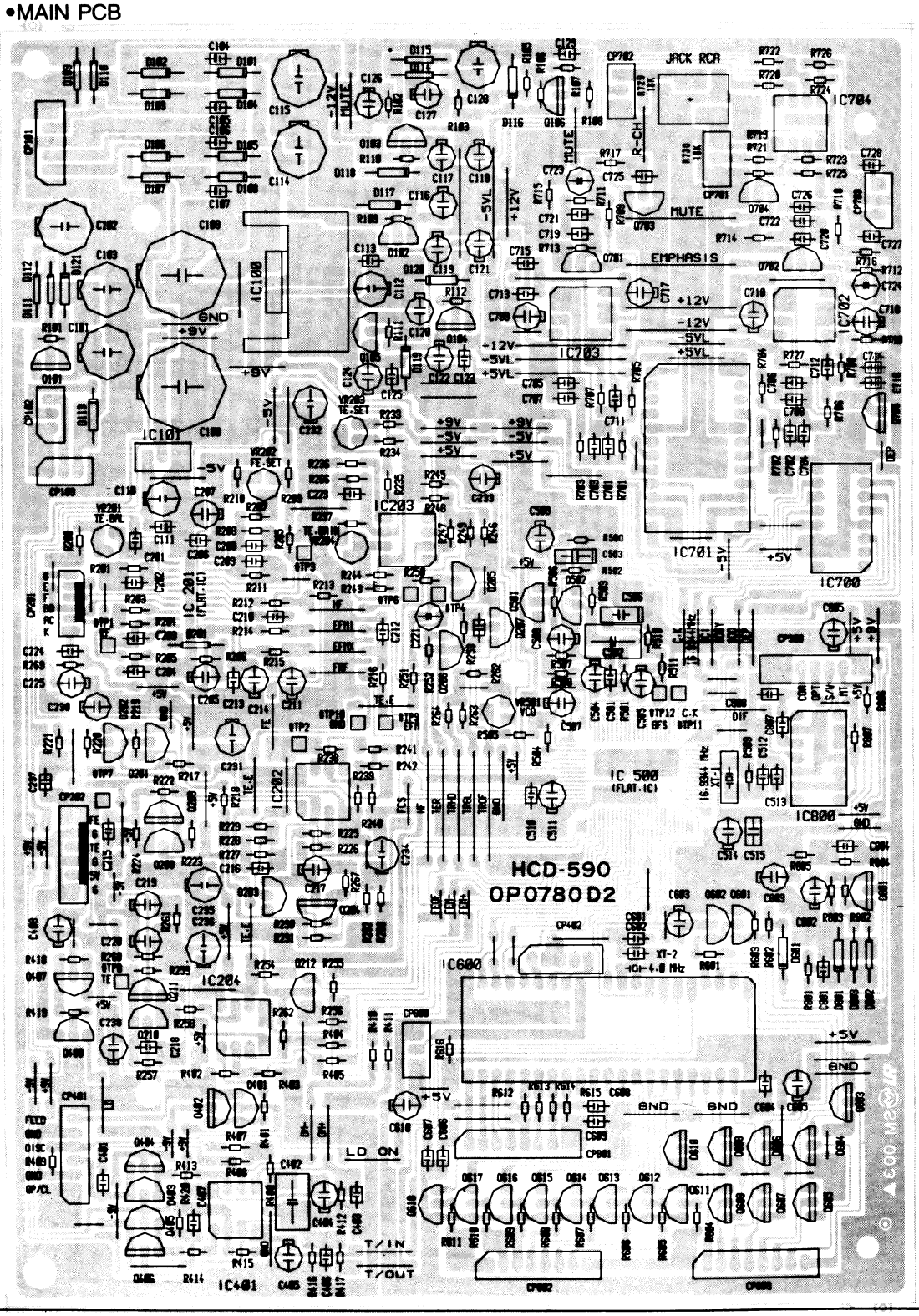

P.C BOARD

•DIGITAL OUT PCB

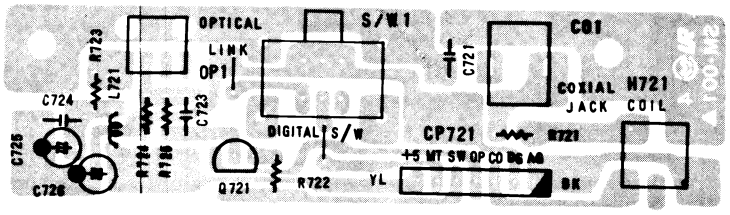

•PANEL PCB

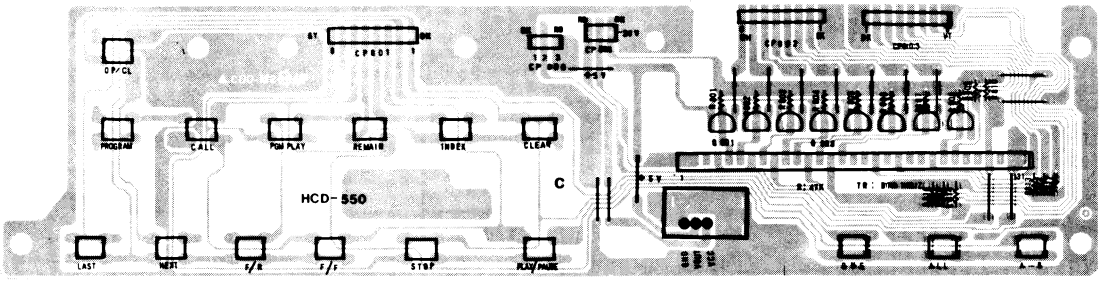

•MOTOR PCB

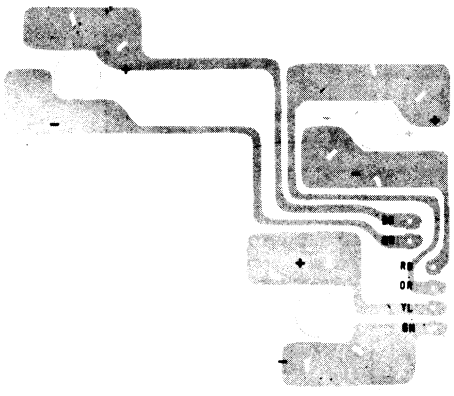

•FUSE PCB

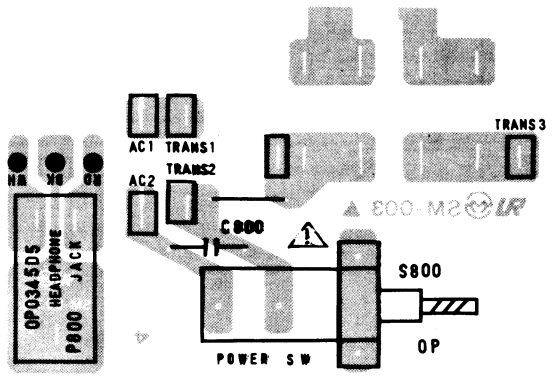

SCHEMATIC DIAGRAM

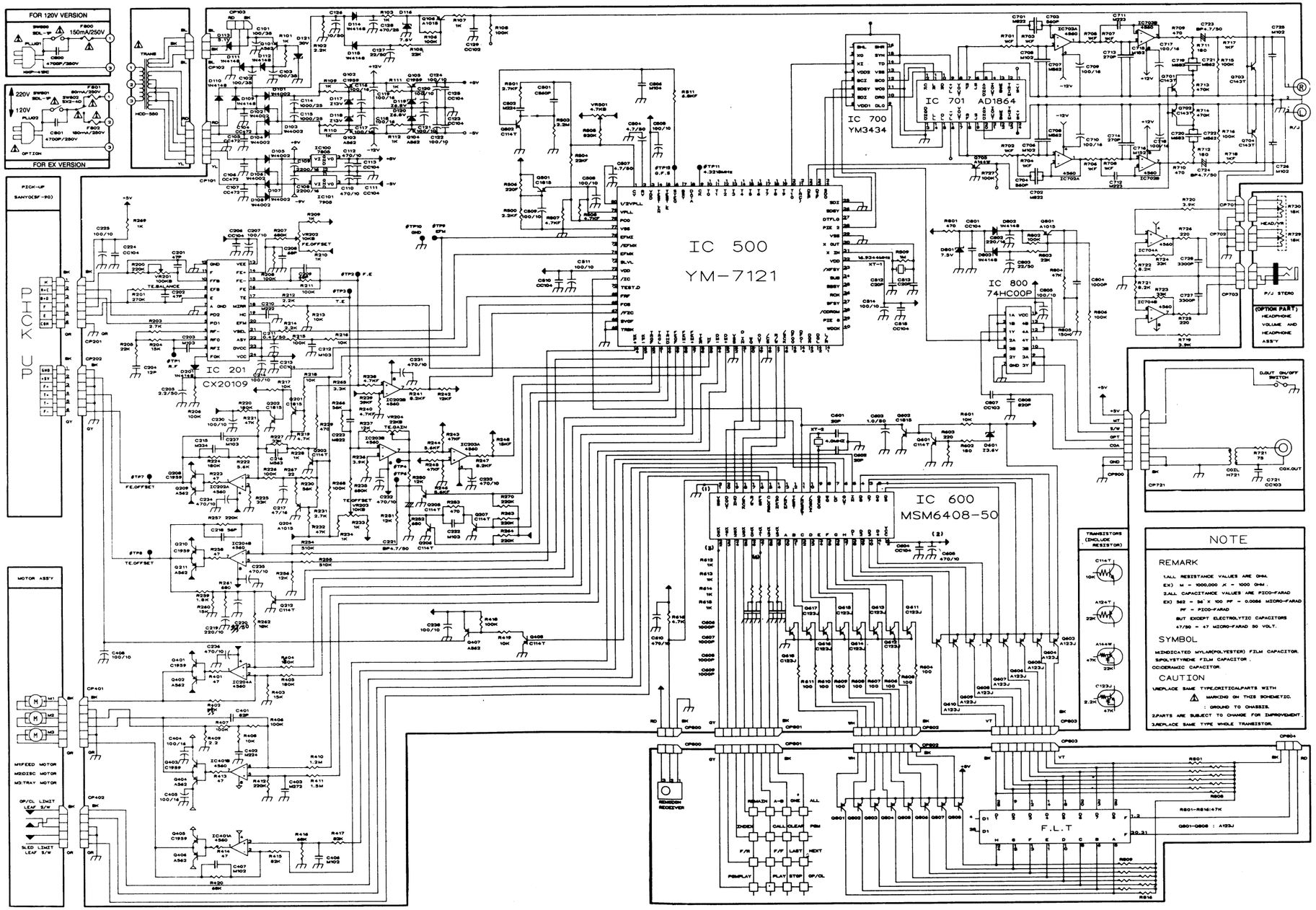

TROUBLE SHOOTING

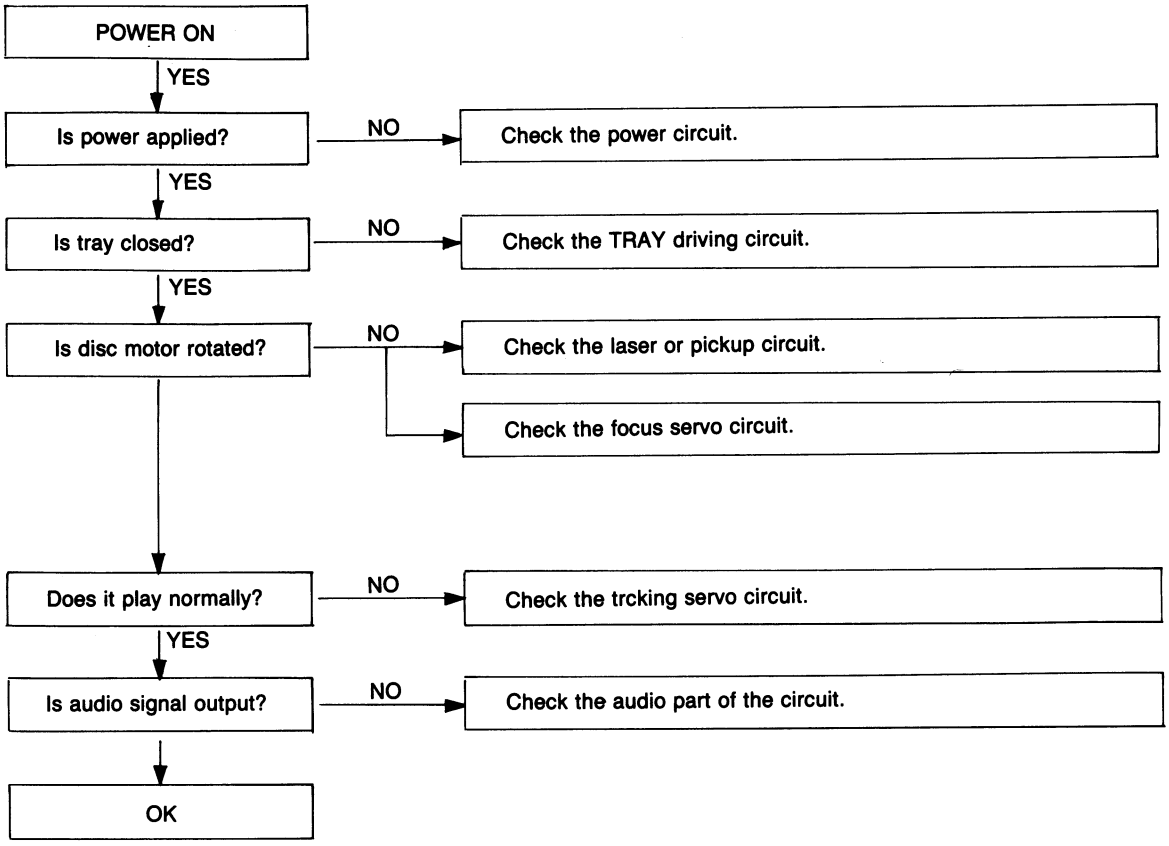

1. If the display does not light

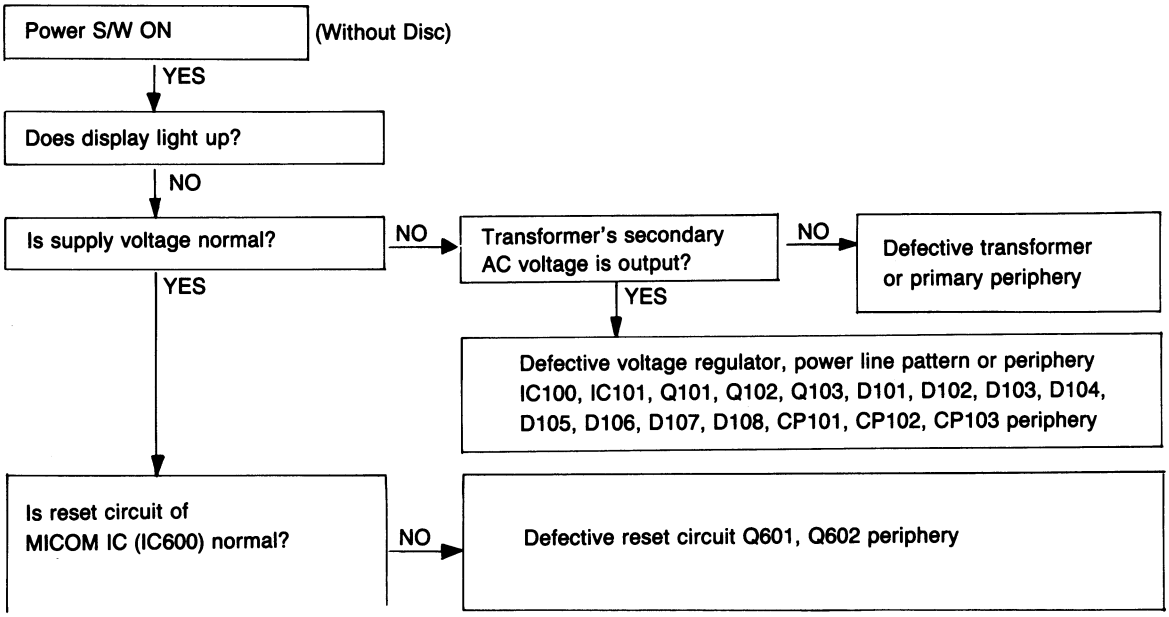

IC600 pin

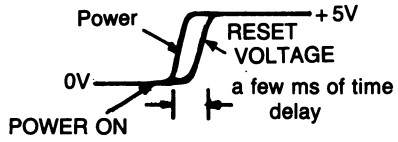

Does oscillating occur at
MICOM IC (IC600) pin ⑨, ⑩?

NO → Defective IC500 pin ㊴ (8.6436MHz) or X-TAL (16.9344MHz) periphery

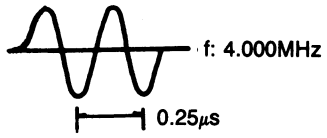

Is scan signal output from
MICOM IC600 pins ①~④, ㊳~㊶?

NO → Defective MICOM IC600

Does scan signal appear at
Display pins (10BT 39Z FLT)?

NO → Defective display driver TR or periphery (Q603~Q610, Q611~Q618) or connector (CP802, CP803)

Defective display (10BT 39Z FLT)?

2. If tray is not working normally

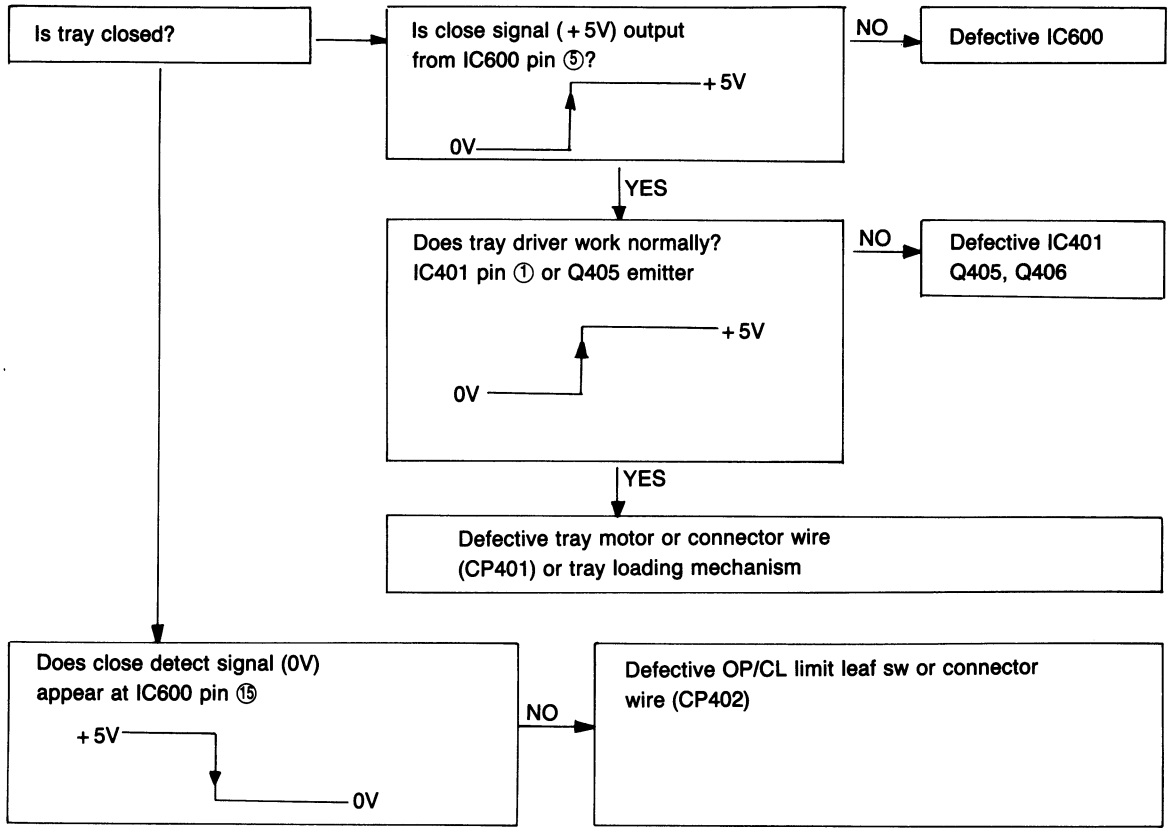

TRAY is opened again if close leaf S/W is not contacted completely within 9 sec after close.

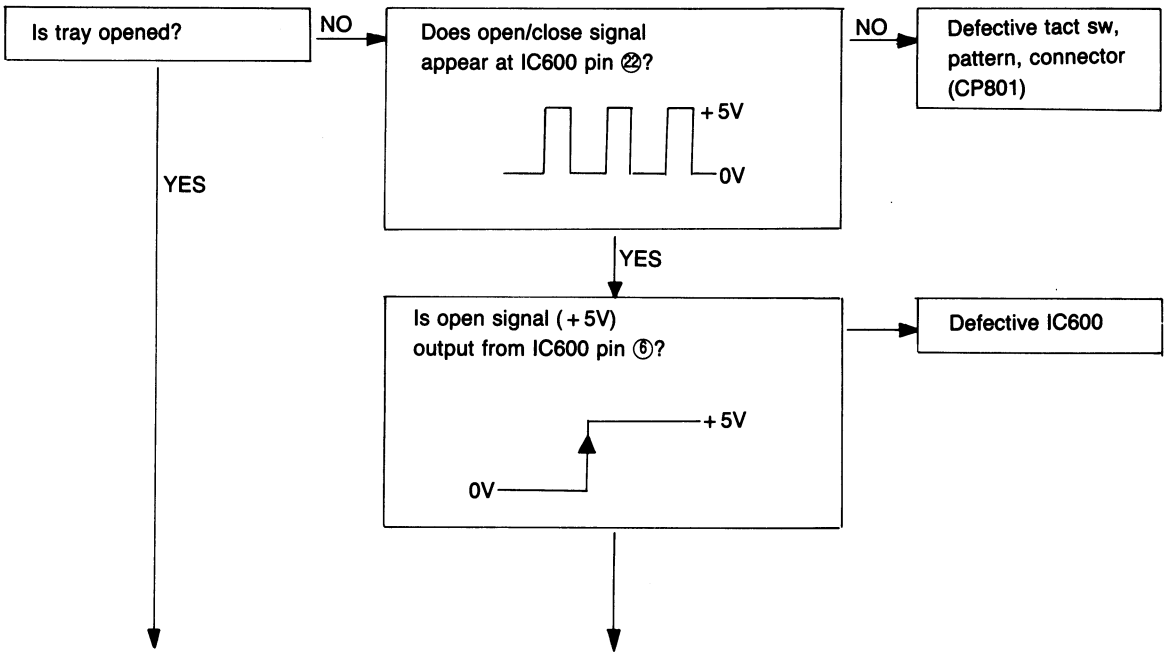

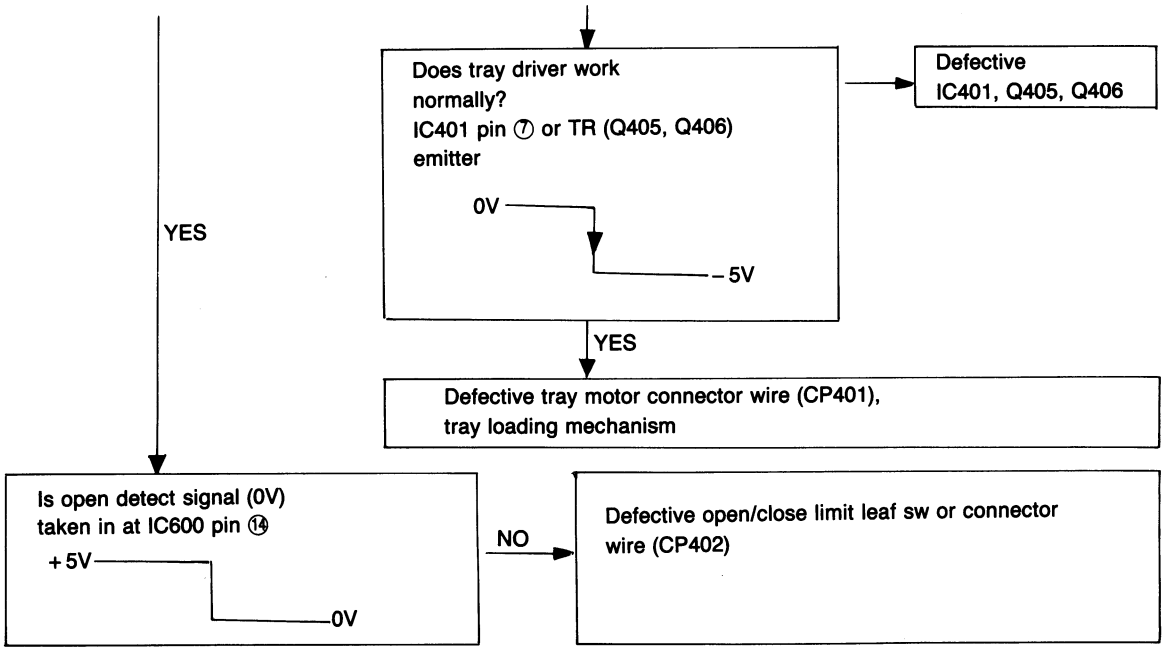

*Tray is closed again if tray open leaf SW is not contacted completely within 9 sec after opening. If the tray open and tray closed leaf switches are not contacted, the tray is automatically opened or closed at 9 second intervals and then stops after 3 tries.

3. If disc does not rotate

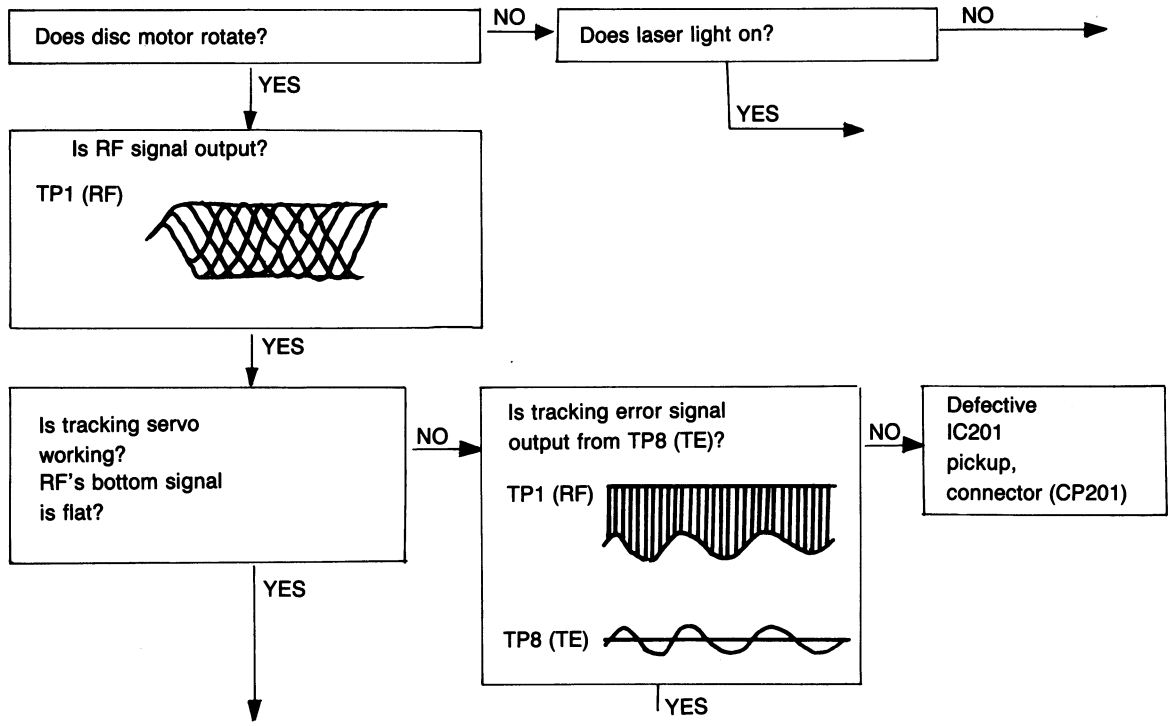

(A) If LASER does not light

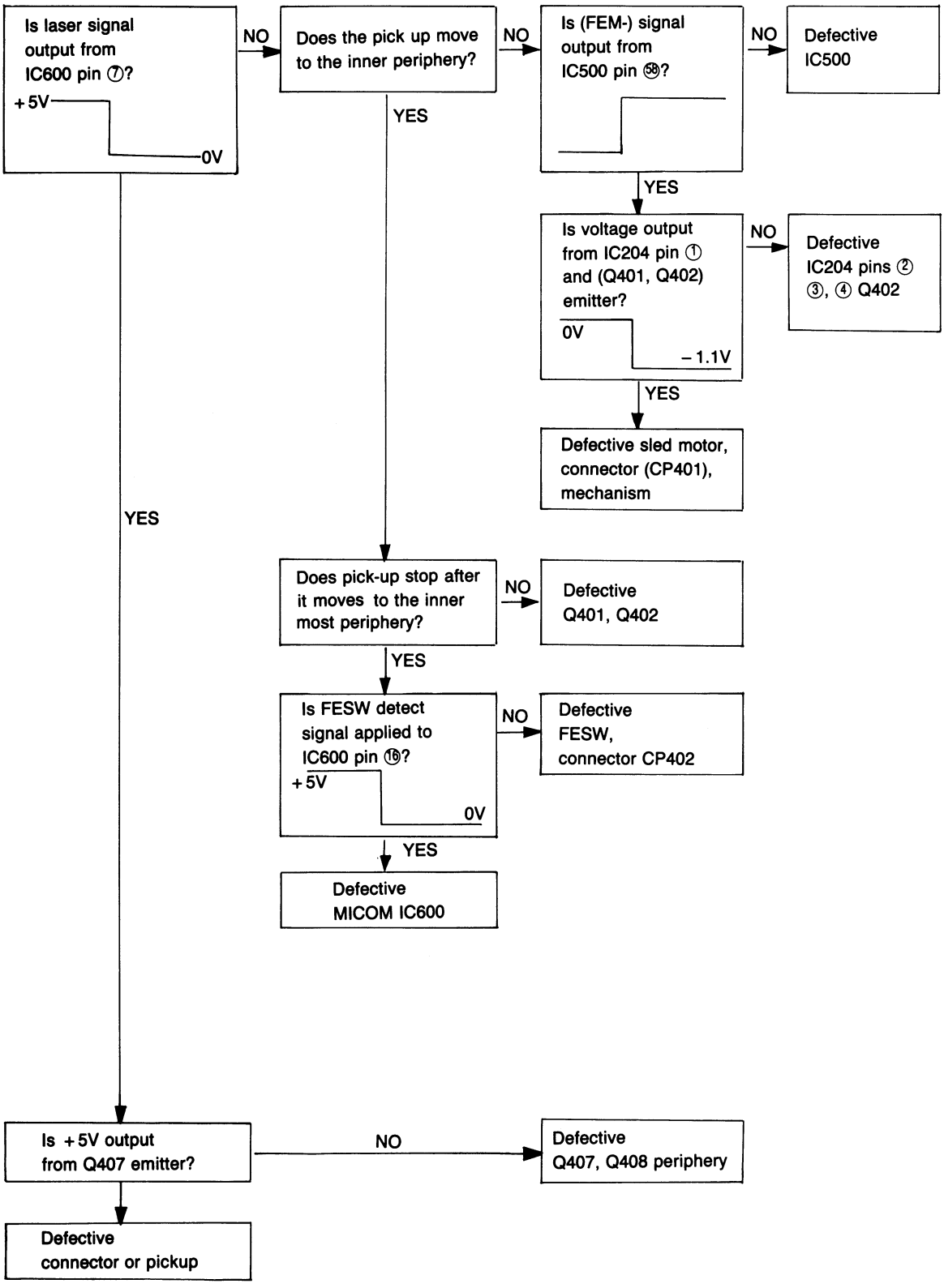

(B) If LASER lights

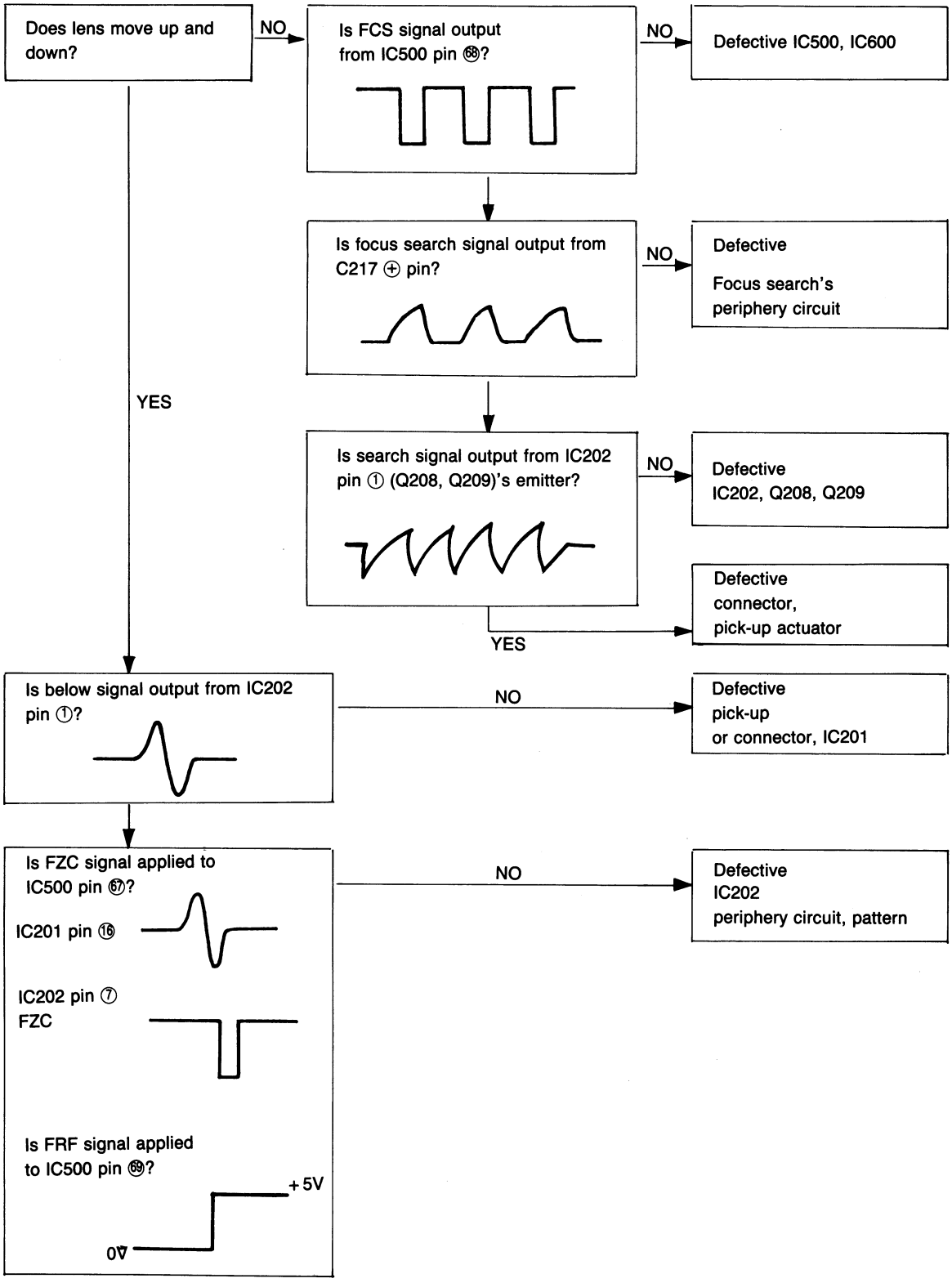

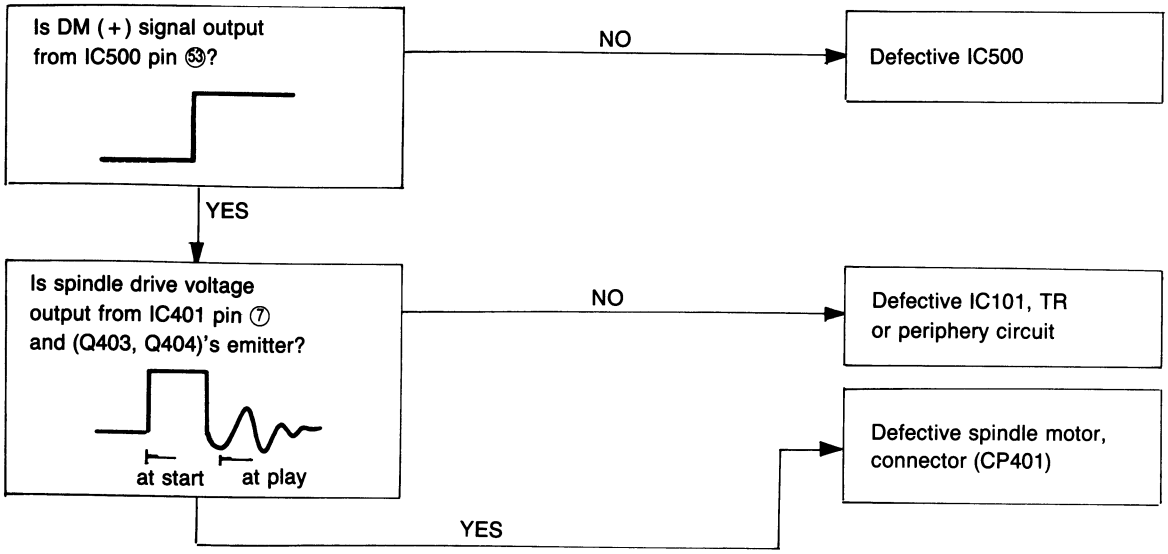

4. Audio circuit check

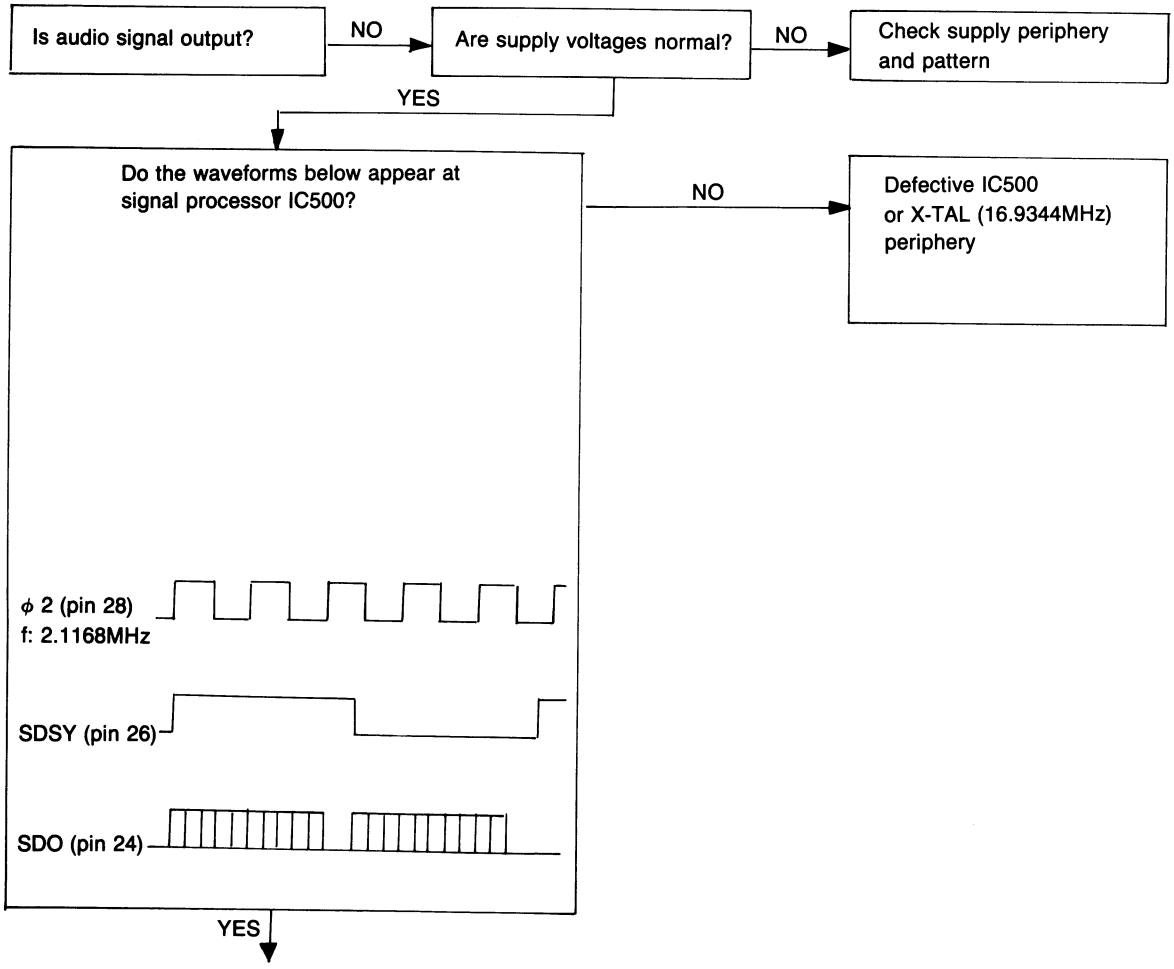

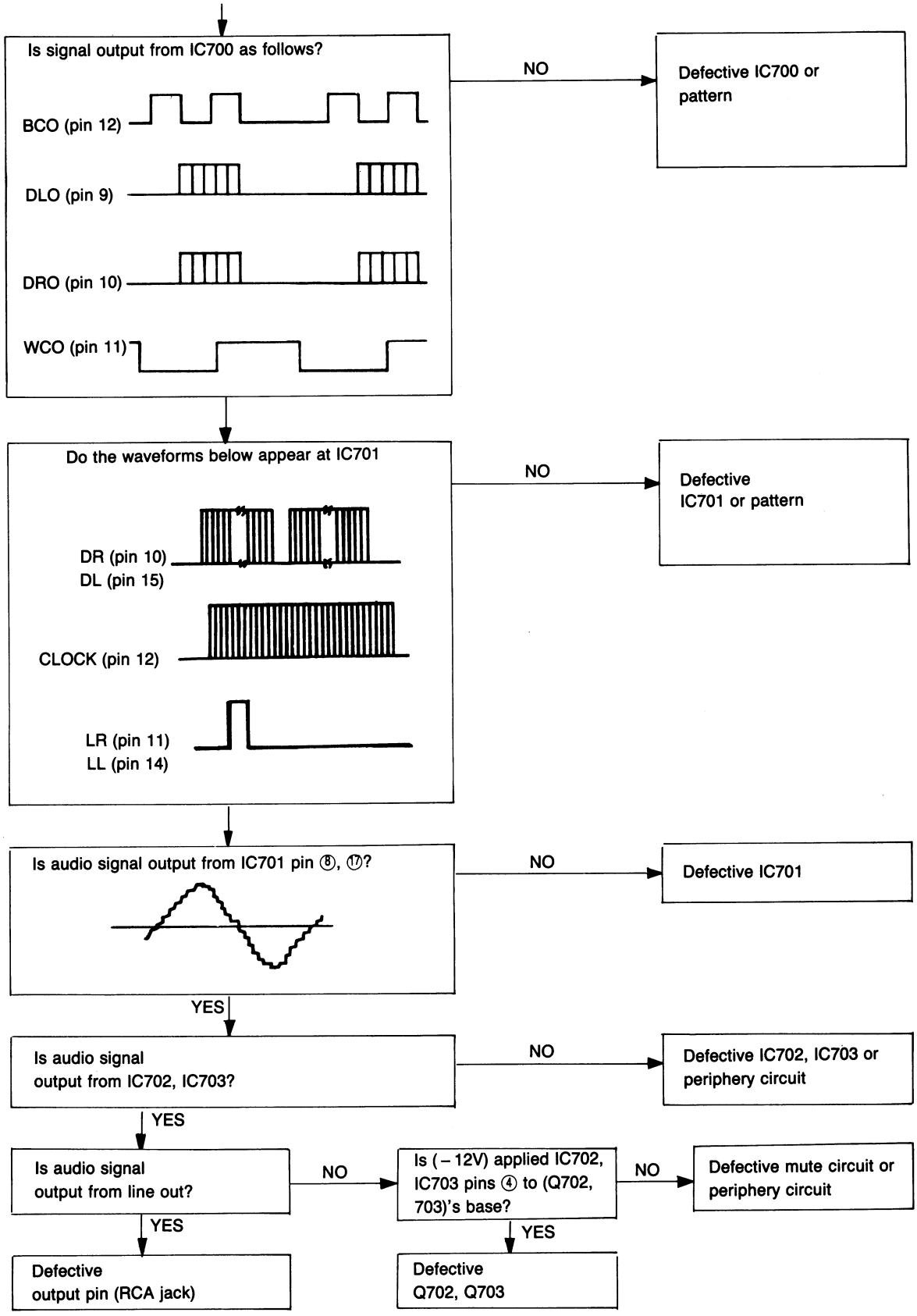
Is signal output from IC700 as follows?
BCO (pin 12)
DLO (pin 9)
DRO (pin 10)
WCO (pin 11)
NO
Defective IC700 or pattern
Do the waveforms below appear at IC701
DR (pin 10)
DL (pin 15)
CLOCK (pin 12)
LR (pin 11)
LL (pin 14)
NO
Defective IC701 or pattern
Is audio signal output from IC701 pin ⑧, ⑰?
NO
Defective IC701
YES
Is audio signal output from IC702, IC703?
NO
Defective IC702, IC703 or periphery circuit
YES
Is audio signal output from line out?
NO
Is (– 12V) applied IC702, IC703 pins ④ to (Q702, 703)'s base?
NO
Defective mute circuit or periphery circuit
YES
Defective output pin (RCA jack)
YES
Defective Q702, Q703

5. Digital out circuit check

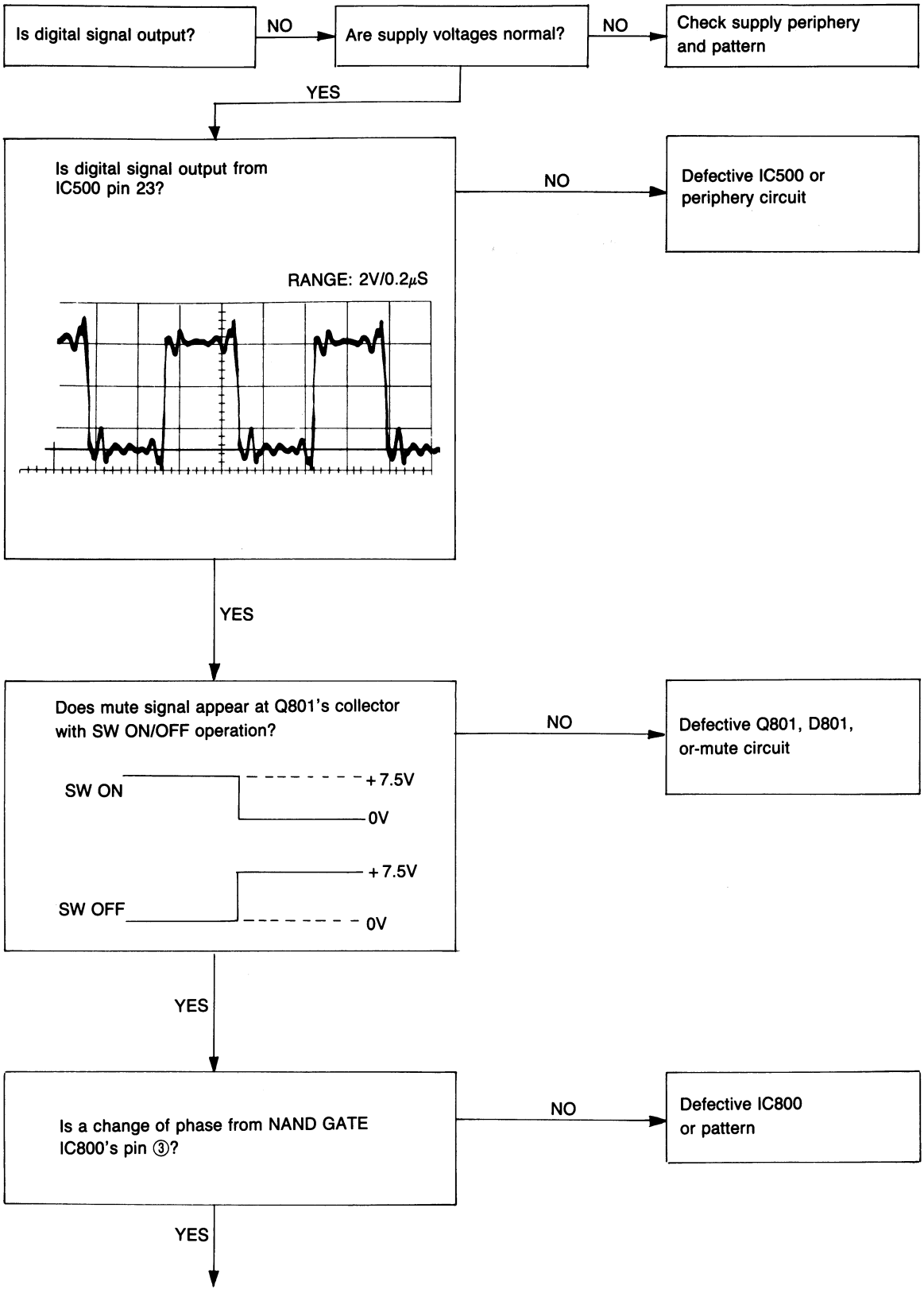

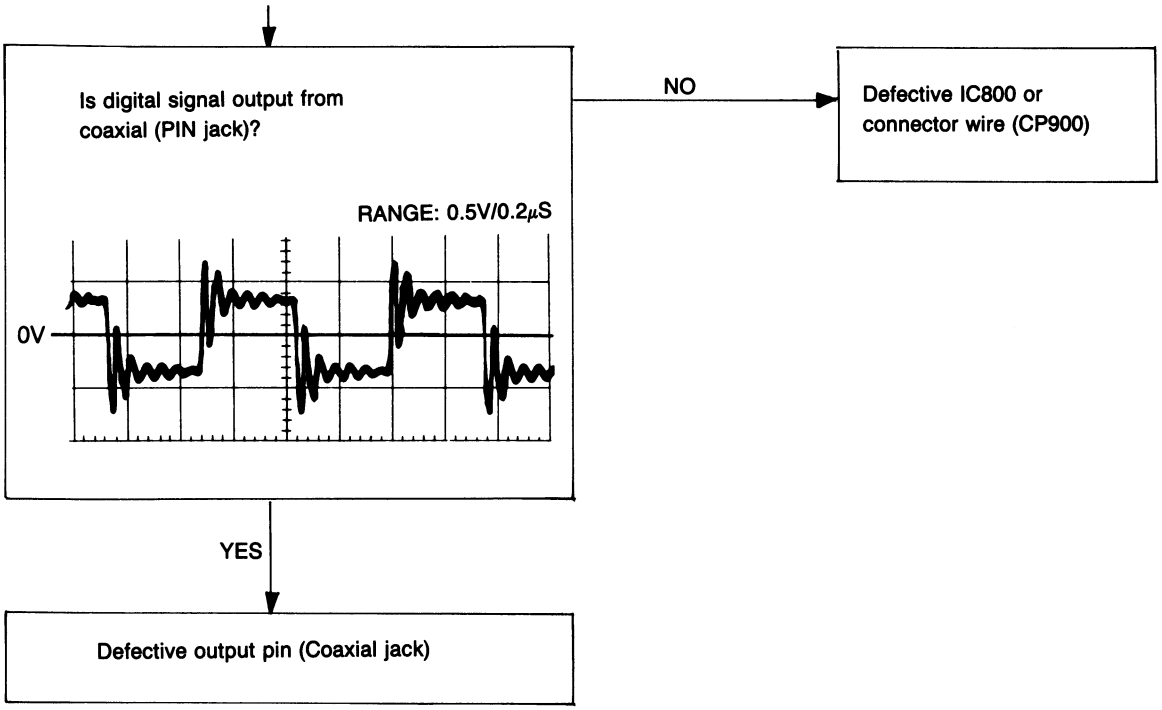
Is digital signal output from coaxial (PIN jack)?
NO
Defective IC800 or connector wire (CP900)
RANGE: 0.5V/0.2μS
0V
YES
Defective output pin (Coaxial jack)

ELECTRICAL PARTS LIST

MAIN PCB ASS'Y

REF NO	DESCRIPTION	PART NO
	ICS	
IC100	GL7805 (REGULATOR)	UU0010G7
IC101	GL7805 (REGULATOR)	UU0020G3
IC201	CX20109 (RF AMP)	UD0060S1
IC202	NJM4560D (OP AMP)	UO0030S5
IC203	NJM4560D (OP AMP)	UO0030S5
IC204	NJM4560D (OP AMP)	UO0030S5
IC401	NJM4560D (OP AMP)	UO0030S5
IC500	YM7121 (DSP)	UD0350Y5
IC600	MSM6408-50 (MICOM)	UA0270S6
IC700	YM3434 (D/Filter)	UD0230Y1
IC701	AD1864 NK (DAC)	UD0360A1
IC702	NJM4560D (OP AMP)	UO0030S5
IC703	NJM4560D (OP AMP)	UO0030S5
IC704	NJM4560D (OP AMP)	UO0030S5
IC800	GD74HCOO (NAND GATE)	UC0150H6
	TRANSISTORS	
Q101	KTA562Y	TA0562Y3
Q102	KTC1959Y	TC1959Y4
Q103	KTA562Y	TA0562Y3
Q104	KTA562Y	TA0562Y3
Q105	KTC1959Y	TC1959Y4
Q106	KTA1015Y	TA1015Y0
Q201	KTC1815Y	TC1815Y7
Q202	KTC1815Y	TC1815Y7
Q203	DTC114TS/KRC1121	TC0114T2
Q204	KTA1015Y	TA1015Y0
Q205	DTC114TS/KRC1121	TC0114T2
Q206	DTC114TS/KRC1121	TC0114T2
Q207	DTC114TS/KRC1121	TC0114T2
Q208	KTC1959Y	TC1959Y4
Q209	KTA562Y	TA0562Y3
Q210	KTC1959Y	TC1959Y4
Q211	KTA562Y	TA0562Y3
Q212	DTC114TS/KRC1121	TC0114T2
Q401	KTC1959Y	TC1959Y4
Q402	KTA562Y	TA0562Y3
Q403	KTC1959Y	TC1959Y4
Q404	KTA562Y	TA0562Y3
Q405	KTC1959Y	TC1959Y4
Q406	KTA562Y	TA0562Y3
Q407	KTA562Y	TA0562Y3
Q408	DTC114TS/KRC1121	TC0114T2
Q501	KTC1815Y	TC1815Y7
Q502	DTC114TS/KRC1121	TC0114T2
Q601	DTC114TS/KRC1121	TC0114T2
Q602	KTC1815Y	TC1815Y7
Q603	DTA123J/KRA2205	TA0123J5
Q604	DTA123J/KRA2205	TA0123J5
Q605	DTA123J/KRA2205	TA0123J5
Q606	DTA123J/KRA2205	TA0123J5
Q607	DTA123J/KRA2205	TA0123J5
Q608	DTA123J/KRA2205	TA0123J5
Q609	DTA123J/KRA2205	TA0123J5
Q610	DTA123J/KRA2205	TA0123J5
Q611	DTC123J/KRC1205	TC0123J6
Q612	DTC123J/KRC1205	TC0123J6
Q613	DTC123J/KRC1205	TC0123J6
Q614	DTC123J/KRC1205	TC0123J6
Q615	DTC123J/KRC1205	TC0123J6
Q616	DTC123J/KRC1205	TC0123J6
Q617	DTC123J/KRC1205	TC0123J6
Q618	DTC123J/KRC1205	TC0123J6
Q701	DTC143T/KRC1210	TC0143T1
Q702	DTC143T/KRC1210	TC0143T1
Q703	DTC143T/KRC1210	TC0143T1
Q704	DTC143T/KRC1210	TC0143T1
Q705	DTA144W/KRA2209	TA0144W7
Q801	KTA1015Y	TA1015Y0
	DIODES	
D101	1N4002 RECTIFIER	KR0042K3
D102	1N4002 RECTIFIER	KR0042K3
D103	1N4002 RECTIFIER	KR0042K3
D104	1N4002 RECTIFIER	KR0042K3
D105	1N4002 RECTIFIER	KR0042K3
D106	1N4002 RECTIFIER	KR0042K3
D107	1N4002 RECTIFIER	KR0042K3
D108	1N4002 RECTIFIER	KR0042K3
D109	1N4148 SWITCHING	KR0005R2
D110	1N4148 SWITCHING	KR0005R2
D111	1N4148 SWITCHING	KR0005R2
D112	1N4148 SWITCHING	KR0005R2
D113	ZENER 7.5V 1/2W	KO0006K5
D114	1N4148 SWITCHING	KR0005R2
D115	1N4148 SWITCHING	KR0005R2
D116	ZENER 7.5V 1/2W	KO0006K5
D117	ZENER 13V 1/2W	KO0003K2
D118	ZENER 13V 1/2W	KO0003K2
D119	ZENER 6.8V 1/2W	KO0004K0
D120	ZENER 6.8V 1/2W	KO0004K0

REF NO	DESCRIPTION	PART NO
	DIODES	
D121	ZENER 30V 1/2W	KO0009K8
D201	1N4148 SWITCHING	KR0005R2
D601	ZENER 3.6V 1/2W	KO0113K1
D801	ZENER 7.5V 1/2W	KR0005R2
D802	1N4148 SWITCHING	KR0005R2
D803	1N4148 SWITCHING	KR0005R2
	VARIABLE RESISTORS	
VR202	RH0621C-10KB	VH0775A5
VR203	RH0621C-10KB	VH0775A5
VR204	RH0621C-22KB	VH0780A1
VR201	RH0621C-100KB	VH1600A1
VR501	RH0621C-4.7KB	VH1590A7
	RESISTORS	
R101	R, CARBON 1/6W 1K 5%	RC1023J7
R102	R, CARBON 1/6W 2.2K 5%	RC2223J7
R103	R, CARBON 1/6W 1K 5%	RC1023J7
R105	R, CARBON 1/6W 22K 5%	RC2233J7
R106	R, CARBON 100K 5%	RC1043J7
R107	R, CARBON 1/6W 1K 5%	RC1023J7
R108	R, CARBON 1/6W 100K 5%	RC1043J7
R109	R, CARBON 1/6W 1K 5%	RC1023J7
R110	R, CARBON 1/6W 1K 5%	RC1023J7
R111	R, CARBON 1/6W 1K 5%	RC1023J7
R112	R, CARBON 1/6W 1K 5%	RC1023J7
R200	R, CARBON 1/6W 220K 5%	RC2243J7
R201	R, CARBON 1/6W 270K 5%	RC2743J7
R203	R, CARBON 1/6W 2.7K 5%	RC2723J7
R204	R, CARBON 1/6W 15K 5%	RC1533J7
R205	R, CARBON 1/6W 22K 5%	RC2233J7
R206	R, CARBON 1/6W 100K 5%	RC1043J7
R207	R, CARBON 1/6W 680K 5%	RC6843J7
R208	R, CARBON 1/6W 100K 5%	RC1043J7
R209	R, CARBON 1/6W 1K 5%	RC1023J7
R210	R, CARBON 1/6W 1K 5%	RC1023J7
R211	R, CARBON 1/6W 100K 5%	RC1043J7
R212	R, CARBON 1/6W 2.2K 5%	RC2223J7
R213	R, CARBON 1/6W 10K 5%	RC1033J7
R214	R, CARBON 1/6W 2.2K 5%	RC2223J7
R215	R, CARBON 1/6W 100K 5%	RC1043J7
R216	R, CARBON 1/6W 10K 5%	RC1033J7
R217	R, CARBON 1/6W 10K 5%	RC1033J7
R218	R, CARBON 1/6W 10K 5%	RC1033J7
R219	R, CARBON 1/6W 4.7K 5%	RC4723J7
R220	R, CARBON 1/6W 180K 5%	RC1843J7
R221	R, CARBON 1/6W 47K 5%	RC4733J7
R222	R, CARBON 1/6W 5.6K 5%	RC5623J7
R223	R, CARBON 1/6W 47 5%	RC4703J7

REF NO	DESCRIPTION	PART NO
R224	R, CARBON 1/6W 180K 5%	RC1843J7
R225	R, CARBON 1/6W 33K 5%	RC3333J7
R226	R, CARBON 1/6W 100K 5%	RC1043J7
R227	R, CARBON 1/6W 33K 5%	RC3333J7
R228	R, CARBON 1/6W 1K 5%	RC1023J7
R229	R, CARBON 1/6W 470 5%	RC4713J7
R230	R, CARBON 1/6W 56K 5%	RC5633J7
R231	R, CARBON 1/6W 2.7K 5%	RC2723J7
R232	R, CARBON 1/6W 47K 5%	RC4733J7
R233	R, CARBON 1/6W 1K 5%	RC1023J7
R234	R, CARBON 1/6W 1K 5%	RC1023J7
R235	R, CARBON 1/6W 680K 5%	RC6843J7
R236	R, CARBON 1/6W 3.9K 5%	RC3923J7
R237	R, CARBON 1/6W 12K 5%	RC1233J7
R238	R, METAL 1/6W 4.7K 5%	RM4720F7
R239	R, METAL 1/6W 39K 5%	RM3930F7
R240	R, METAL 1/6W 4.7K 5%	RM4720F7
R241	R, METAL 1/6W 8.2K 5%	RM8220F7
R242	R, METAL 1/6W 12K 5%	RM1230F7
R243	R, METAL 1/6W 47K 5%	RM4730F7
R244	R, METAL 1/6W 5.6K 5%	RM5620F7
R245	R, METAL 1/6W 47K 5%	RM4730F7
R246	R, METAL 1/6W 5.6K 5%	RM5620F7
R247	R, METAL 1/6W 8.2K 5%	RM8220F7
R248	R, METAL 1/6W 12K 5%	RM1230F7
R250	R, CARBON 1/6W 12K 5%	RC1233J7
R251	R, CARBON 1/6W 12K 5%	RC1233J7
R252	R, CARBON 1/6W 680 5%	RC6813J7
R253	R, CARBON 1/6W 470 5%	RC4713J7
R254	R, CARBON 1/6W 150K 5%	RC1543J7
R255	R, CARBON 1/6W 470K 5%	RC4743J7
R256	R, CARBON 1/6W 12K 5%	RC1233J7
R257	R, CARBON 1/6W 220K 5%	RC2243J7
R258	R, CARBON 1/6W 47 5%	RC4703J7
R259	R, CARBON 1/6W 1.8K 5%	RC1823J7
R260	R, CARBON 1/6W 15K 5%	RC1533J7
R261	R, CARBON 1/6W 680 5%	RC6813J7
R262	R, CARBON 1/6W 12K 5%	RC1233J7
R263	R, CARBON 1/6W 220K 5%	RC2243J7
R264	R, CARBON 1/6W 220K 5%	RC2243J7
R265	R, CARBON 1/6W 3.3K 5%	RC3323J7
R266	R, CARBON 1/6W 56K 5%	RC5633J7
R267	R, CARBON 1/6W 22 5%	RC2203J7
R268	R, CARBON 1/6W 100K 5%	RC1043J7
R269	R, CARBON 1/6W 1K 5%	RC1023J7
R270	R, CARBON 1/6W 220K 5%	RC2243J7
R401	R, CARBON 1/6W 47 5%	RC4703J7
R402	R, CARBON 1/6W 56K 5%	RC5633J7
R403	R, CARBON 1/6W 15K 5%	RC1533J7
R404	R, CARBON 1/6W 180K 5%	RC1843J7
R405	R, CARBON 1/6W 180K 5%	RC1843J7
R406	R, CARBON 1/6W 120K 5%	RC1243J7

REF NO	DESCRIPTION	PART NO
R407	R, CARBON 1/6W 120K 5%	RC1243J7
R408	R, CARBON 1/6W 2.2 5%	RC1033J7
R409	R, CARBON 1/6W 1.2M 5%	RC2R23J7
R410	R, CARBON 1/6W 1.5M 5%	RC1253J7
R411	R, CARBON 1/6W 220K 5%	RC1553J7
R412	R, CARBON 1/6W 220K 5%	RC2243J7
R413	R, CARBON 1/6W 47 5%	RC4703J7
R414	R, CARBON 1/6W 47 5%	RC4703J7
R415	R, CARBON 1/6W 82K 5%	RC8233J7
R416	R, CARBON 1/6W 82K 5%	RC8233J7
R417	R, CARBON 1/6W 82K 5%	RC8233J7
R418	R, CARBON 1/6W 100K 5%	RC1043J7
R419	R, CARBON 1/6W 10K 5%	RC1033J7
R420	R, CARBON 1/6W 82K 5%	RC8233J7
R500	R, METAL 1/6W 2.7K 1%	RM2720F7
R501	R, METAL 1/6W 2.7K 1%	RM2720F7
R503	R, CARBON 1/6W 2.2M 5%	RC2253J7
R504	R, METAL 1/6W 22K 1%	RM2230F7
R505	R, CARBON 1/6W 820K 5%	RC8243J7
R506	R, METAL 1/6W 220 1%	RM2210F7
R507	R, METAL 1/6W 4.7K 1%	RM4720F7
R508	R, METAL 1/6W 4.7K 1%	RM4720F7
R509	R, CARBON 1/6W 1M 5%	RC1053J7
R511	R, METAL 1/6W 6.8K 1%	RM6820F7
R601	R, CARBON 1/6W 10K 5%	RC1033J7
R602	R, CARBON 1/6W 180 5%	RC1813J7
R603	R, CARBON 1/6W 220 5%	RC2213J7
R604	R, CARBON 1/6W 100 5%	RC1013J7
R605	R, CARBON 1/6W 100 5%	RC1013J7
R606	R, CARBON 1/6W 100 5%	RC1013J7
R607	R, CARBON 1/6W 100 5%	RC1013J7
R608	R, CARBON 1/6W 100 5%	RC1013J7
R609	R, CARBON 1/6W 100 5%	RC1013J7
R610	R, CARBON 1/6W 100 5%	RC1013J7
R611	R, CARBON 1/6W 100 5%	RC1013J7
R612	R, CARBON 1/6W 1K 5%	RC1023J7
R613	R, CARBON 1/6W 1K 5%	RC1023J7
R614	R, CARBON 1/6W 1K 5%	RC1023J7
R615	R, CARBON 1/6W 1K 5%	RC1023J7
R616	R, CARBON 1/6W 4.7K 5%	RC4723J7
R701	R, METAL 1/6W 1K 1%	RM1020F7
R702	R, METAL 1/6W 1K 1%	RM1020F7
R703	R, METAL 1/6W 1K 1%	RM1020F7
R704	R, METAL 1/6W 1K 1%	RM1020F7
R705	R, METAL 1/6W 1K 1%	RM1020F7
R706	R, METAL 1/6W 1K 1%	RM1020F7
R707	R, METAL 1/6W 1K 1%	RM1020F7
R708	R, METAL 1/6W 1K 1%	RM1020F7
R709	R, CARBON 1/6W 470 5%	RC4713J7
R710	R, CARBON 1/6W 470 5%	RC4713J7
R711	R, CARBON 1/6W 180 5%	RC1813J7
R712	R, CARBON 1/6W 180 5%	RC1813J7

REF NO	DESCRIPTION	PART NO
R713	R, CARBON 1/6W 470K 5%	RC4743J7
R714	R, CARBON 1/6W 470K 5%	RC4743J7
R715	R, CARBON 1/6W 100K 5%	RC1043J7
R716	R, CARBON 1/6W 100K 5%	RC1043J7
R717	R, METAL 1/6W 1K 1%	RM1020F7
R718	R, METAL 1/6W 1K 1%	RM1020F7
R719	R, CARBON 1/6W 3.9K 5%	RC3923J7
R720	R, CARBON 1/6W 3.9K 5%	RC3923J7
R721	R, CARBON 1/6W 22K 5%	RC2233J7
R722	R, CARBON 1/6W 22K 5%	RC2233J7
R723	R, CARBON 1/6W 22K 5%	RC2233J7
R724	R, CARBON 1/6W 22K 5%	RC2233J7
R725	R, CARBON 1/6W 220 5%	RC2213J7
R726	R, CARBON 1/6W 220 5%	RC2213J7
R727	R, CARBON 1/6W 100K 5%	RC1043J7
R729	R, CARBON 1/6W 18K 5%	RC1833J7
R730	R, CARBON 1/6W 18K 5%	RC1833J7
R801	R, CARBON 1/6W 470 5%	RC4713J7
R802	R, CARBON 1/6W 100K 5%	RC1043J7
R803	R, CARBON 1/6W 22K 5%	RC4733J7
R804	R, CARBON 1/6W 47K 5%	RC1543J7
R805	R, CARBON 1/6W 150K 5%	RC1043J7
R806	R, CARBON 1/6W 100K 5%	RC1043J7
R807	R, CARBON 1/6W 22 5%	RC2203J7
	CAPACITORS	
C101	ELECTROLYTIC 35V 100μF	PE0414E0
C102	ELECTROLYTIC 35V 100μF	PE0414E0
C103	ELECTROLYTIC 35V 100μF	PE0414E0
C104	CERAMIC 50V 0.0047μF	QP4728M8
C105	CERAMIC 50V 0.0047μF	QP4728M8
C106	CERAMIC 50V 0.0047μF	QP4728M8
C107	CERAMIC 50V 0.0047μF	QP4728M8
C108	ELECTROLYTIC 16V 2200μF	PE0219C5
C109	ELECTROLYTIC 16V 2200μF	PE0219C5
C110	ELECTROLYTIC 10V 470μF	QC1047Z6
C111	CERAMIC 50V 0.1μF	QC1047Z6
C112	ELECTROLYTIC 10V 470μF	PE0417B3
C113	CERAMIC 50V 0.1μF	QC1047Z6
C114	ELECTROLYTIC 25V 1000μF	PE0418D7
C115	ELECTROLYTIC 25V 1000μF	PE0418D7
C116	ELECTROLYTIC 16V 100μF	PE0414C3
C117	ELECTROLYTIC 16V 100μF	PE0414C3
C118	ELECTROLYTIC 16V 100μF	PE0414C3
C119	ELECTROLYTIC 16V 100μF	PE0414C3
C120	ELECTROLYTIC 10V 100μF	PE0414B0
C121	ELECTROLYTIC 10V 100μF	PE0414B0
C122	ELECTROLYTIC 10V 100μF	PE0414B0
C123	CERAMIC 50V 0.1μF	QC1047Z6
C124	ELECTROLYTIC 10V 100μF	PE0414B0
C125	CERAMIC 50V 0.1μF	QZ1047Z6
C126	ELECTROLYTIC 50V 10μF	PE0210G8

REF NO	DESCRIPTION	PART NO
C127	ELECTROLYTIC 50V 22μF	PE0211G6
C128	ELECTROLYTIC 25V 470μF	PE0417D0
C129	CERAMIC 50V 0.001μF	QP1026K0
C201	CERAMIC 50V 47pF	QP4702J1
C202	CERAMIC 47pF	QP4702J1
C203	MYLAR 50V 0.01μF	PM1033G8
C204	CERAMIC 50V 12pF	QP1202J1
C205	ELECTROLYTIC 50V 2.2μF	PE1207G5
C206	CERAMIC 50V 0.1μF	QC1047Z6
C207	ELECTROLYTIC 10V 100μF	PE0414B0
C208	CERAMIC 50V 68pF	QP6802K3
C209	CERAMIC 50V 68pF	QP6802K3
C210	MYLAR 50V 0.0022μF	PM2223G7
C211	ELECTROLYTIC 50V 0.47μF	PE0204G4
C212	MYLAR 50V 0.01μF	PM1033G8
C213	CERAMIC 50V 0.1μF	QC1047Z6
C214	ELECTROLYTIC 10V 100μF	PE0414B0
C215	MYLAR 50V 0.33μF	PM3343G0
C216	MYLAR 50V 0.056μF	PM5633G0
C217	ELECTROLYTIC 16V 47μF	PE0213C8
C218	CERAMIC 50V 56pF	QP5602J5
C219	ELECTROLYTIC 10V 220μF	PE0415B7
C220	ELECTROLYTIC 25V 33μF	PE0212D4
C221	ELECTROLYTIC 50V 4.7μF	PE1609G4
C222	MYLAR 50V 0.01μF	PM1033G8
C223	MYLAR 50V 0.0082μF	PM8223G4
C224	CERAMIC 50V 0.1μF	QC1047Z6
C225	ELECTROLYTIC 10V 100μF	PE0414B0
C230	ELECTROLYTIC 10V 100μF	PE0414B0
C231	ELECTROLYTIC 10V 470μF	PE0417B3
C232	ELECTROLYTIC 10V 470μF	PE0417B3
C233	ELECTROLYTIC 10V 470μF	PE0417B3
C234	ELECTROLYTIC 10V 470μF	PE0417B3
C235	ELECTROLYTIC 10V 470μF	PE0417B3
C236	ELECTROLYTIC 10V 470μF	PE0417B3
C237	MYLAR 50V 0.01μF	PM1033G8
C238	ELECTROLYTIC 10V 100μF	PE0414B0
C401	CERAMIC 50V 82pF	QP8202K8
C402	MYLAR 50V 0.22μF	PM2243G8
C403	MYLAR 50V 0.0027μF	PM2723G4
C404	ELECTROLYTIC 16V 100μF	PE0414C3
C405	ELECTROLYTIC 16V 100μF	PE0414C3
C406	MYLAR 50V 0.001μF	PM1023G3
C407	MYLAR 50V 0.001μF	PM1023G3
C408	ELECTROLYTIC 10V 100μF	PE0414B0
C501	CERAMIC 50V 560pF	QP5616K5
C502	MYLAR 50V 0.22μF	PM2243G8
C555	CERAMIC 50V 68pF	QP6802K3
C504	ELECTROLYTIC 50V 4.7μF	PE0209G3
C505	ELECTROLYTIC 10V 100μF	PE0414B0
C506	MYLAR 50V 0.1μF	PM1043G4

REF NO	DESCRIPTION	PART NO
C507	ELECTROLYTIC 50V 4.7pF	PE0209C3
C508	ELECTROLYTIC 10V 100μF	PE0414B0
C509	ELECTROLYTIC 10V 100μF	PE0414B0
C510	CERAMIC 50V 0.1μF	QC1047Z6
C511	ELECTROLYTIC 10V 100μF	PE0414B0
C512	CERAMIC 50V 20pF	QP2002K5
C513	CERAMIC 50V 20pF	QP2002K5
C514	ELECTROLYTIC 10V 100μF	PE0414B0
C515	CERAMIC 50V 0.1μF	QC1047Z6
C601	CERAMIC 50V 20pF	QP2002K5
C602	CERAMIC 50V 20pF	QP2002K5
C603	ELECTROLYTIC 50V 1μF	PE0206G0
C604	CERAMIC 50V 0.1μF	QC1047Z6
C605	ELECTROLYTIC 10V 470μF	PE0417B3
C606	CERAMIC 50V 0.001μF	QP1026K0
C607	CERAMIC 50V 0.001μF	QP1026K0
C608	CERAMIC 50V 0.001μF	QP1026K0
C609	CERAMIC 50V 0.001μF	QP1026K0
C610	ELECTROLYTIC 10V 470μF	PE0417B3
C701	MYLAR 50V 0.0082μF	PM8223G4
C702	MYLAR 50V 0.0082μF	PM8223G4
C703	CERAMIC 50V 560pF	QP5616K5
C704	CERAMIC 50V 560pF	QP5616K5
C705	MYLAR 50V 0.001μF	PM1023G3
C706	MYLAR 50V 0.001μF	PM1023G3
C707	MYLAR 50V 0.0056μF	PM5623G4
C708	MYLAR 50V 0.0056μF	PM5623G4
C709	ELECTROLYTIC 16V 100μF	PE0414C3
C710	ELECTROLYTIC 16V 100μF	PE0414C3
C711	MYLAR 50V 0.022μF	PM2233G6
C712	MYLAR 50V 0.022μF	PM2233G6
C713	CERAMIC 50V 270pF	QP2716K5
C714	CERAMIC 50V 270pF	QP2726K5
C715	MYLAR 50V 0.0015μF	PM1523G0
C716	MYLAR 50V 0.0015μF	PM1523G0
C717	ELECTROLYTIC 16V 100μF	PE0414C3
C718	ELECTROLYTIC 16V 100μF	PE0414C3
C719	MYLAR 50V 0.068μF	PM6833G4
C720	MYLAR 50V 0.068μF	PM6833G4
C721	MYLAR 50V 0.0056μF	PM5623G4
C722	MYLAR 50V 0.0056μF	PM5623G4
C723	ELECTROLYTIC 50V 4.7μF	PE1609G4
C724	ELECTROLYTIC 50V 4.7μF	PE1609G4
C725	MYLAR 50V 0.001μF	PM1023G3
C726	MYLAR 50V 0.001μF	PM1023G3
C727	CERAMIC 50V 0.0033μF	QP3324M6
C728	CERAMIC 50V 0.0033μF	QP3324M6
C801	CERAMIC 50V 0.1μF	QC1047Z6
C802	ELECTROLYTIC 16V 220μF	PE0415C1
C803	ELECTROLYTIC 50V 22μF	PE0211G5
C804	CERAMIC 50V 0.001μF	QP1026K0

REF NO	DESCRIPTION	PART NO
C805	ELECTROLYTIC 10V 100μF	PE0414B0
C807	CERAMIC 50V 0.01μF	QP1039M5
C808	CERAMIC 50V 820pF	QP8211J3
	MISCELLANEOUS	
CP101	WAFER 5267-05A	NW0170M2
CP102	WAFER 5267-03A	NW0870M5
CP103	WAFER 5267-03A	NW0870M5
CP201	WAFER 868-PH	NW3500J0
CP202	WAFER 868-EH	NW3510J5
CP401	WAFER 5267-06A	NW0810M2
CP402	WAFER 5267-05A	NW0170M2
CP703	WAFER 5267-03A	NW0870M5
CP800	WAFER 5267-03A	NW0870M5
CP801	WAFER 5267-08A	NW1270M3
CP802	WAFER 5267-08A	NW1270M3
CP803	WAFER 5267-08A	NW1270M3
CP900	WAFER 5267-07A	NW0110M8
CP901	CONNECTOR 4P-230mm	WL0377D1
XT2	RESONATOR, CERAMIC	OR0002T4
XT1	X-TAL (16.9344 MHz)	OX0006S5
	HEAT SINK (24KK17)	EG0310N0
	PLATE EARTH	EP0560M1
	PLATE SHIELD (FTZ)	EP0870L3
R/J	RCA JACK (AP2-0029)	

FRONT PCB ASS'Y

Q801	TR, DTA 123J/KRA2205	TA0123J5
Q802	TR, DTA 123J/KRA2205	TA0123J5
Q803	TR, DTA 123J/KRA2205	TA0123J5
Q804	TR, DTA 123J/KRA2205	TA0123J5
Q805	TR, DTA 123J/KRA2205	TA0123J5
Q806	TR, DTA 123J/KRA2205	TA0123J5
Q807	TR, DTA 123J/KRA2205	TA0123J5
Q808	TR, DTA 123J/KRA2205	TA0123J5
R801	R, CARBON 1/6W 47K 5%	RC4733J7
R802	R, CARBON 1/6W 47K 5%	RC4733J2
R803	R, CARBON 1/6W 47K 5%	RC4733J2
R804	R, CARBON 1/6W 47K 5%	RC4733J2
R805	R, CARBON 1/6W 47K 5%	RC4733J2
R806	R, CARBON 1/6W 47K 5%	RC4733J2
R807	R, CARBON 1/6W 47K 5%	RC4733J2
R808	R, CARBON 1/6W 47K 5%	RC4733J2
R809	R, CARBON 1/6W 47K 5%	RC4733J2
R810	R, CARBON 1/6W 47K 5%	RC4733J2
R811	R, CARBON 1/6W 47K 5%	RC4733J2
R812	R, CARBON 1/6W 47K 5%	RC4733J2
R813	R, CARBON 1/6W 47K 5%	RC4733J2
R814	R, CARBON 1/6W 47K 5%	RC4733J2
R815	R, CARBON 1/6W 47K 5%	RC4733J2
R816	R, CARBON 1/6W 47K 5%	RC4733J2

REF NO	DESCRIPTION	PART NO
F800	F.L.T DISPLAY	OD0023D2
RMC1	REMOTE RECEIVER, HC307	OD0038D6
SW1	TACT S/W JTP 1230 A	ST0120J4
SW2	TACT S/W JTP 1230 A	ST0120J4
SW3	TACT S/W JTP 1230 A	ST0120J4
SW4	TACT S/W JTP 1230 A	ST0120J4
SW5	TACT S/W JTP 1230 A	ST0120J4
SW6	TACT S/W JTP 1230 A	ST0120J4
SW7	TACT S/W JTP 1230 A	ST0120J4
SW8	TACT S/W JTP 1230 A	ST0120J4
SW9	TACT S/W JTP 1230 A	ST0120J4
SW10	TACT S/W JTP 1230 A	ST0120J4
SW11	TACT S/W JTP 1230 A	ST0120J4
SW12	TACT S/W JTP 1230 A	ST0120J4
SW13	TACT S/W JTP 1230 A	ST0120J4
SW14	TACT S/W JTP 1230 A	ST0120J4
SW15	TACT S/W JTP 1230 A	ST0120J4
SW16	TACT S/W JTP 1230 A	ST0120J4
CP800	CONNECTOR 3P-210 mm	WP0099L1
CP801	CONNECTOR 8P-190 mm	WD0104L4
CP802	CONNECTOR 8P-150 mm	WD0102L0
CP803	CONNECTOR 8P-180 mm	WD0103L7
CP804	CONNECTOR 3P-280 mm	WL0623D3

FUSE PCB ASS'Y

C800	C, CERAMIC ⚠	QM4726M6
	(DE 7150FZ 472 MVI-KC)	
	TAP STUD	ET0090M3
	TAP STUD	ET0090M3
	TAP STUD	ET0090M3
	POWER S/W (SDDL-S006) ⚠	SP0580G8
	FUSE, 150mA (100-120V version) ⚠	
	FUSE, 80mA (220-240V version) ⚠	

HEADPHONE ASS'Y

	PHONE JACK (HYT30-065)	NR0120S6
	CONNECTOR 3P-670 mm	WL0628D2

DIN PCB ASS'Y

R901	R, CARBON 1/6W 1K 5%	RC1023J6
R902	R, CARBON 1/6W 100K 5%	RC1043J6
R903	R, CARBON 1/6W 56K 5%	RC5633J6
C901	ELECTROLYTIC 50V 1μF	PA0206G7
CP902	WAFER 5267-04A	NW0080M4
D/CORD	6 PIN-2M	NC0550K1

THE PARTS OF DIGITAL OUT CIRCUIT

DIGITAL OUT PCB ASS'Y

REF NO	DESCRIPTION	PART NO
	DIGITAL OUT PCB ASS'Y	
CO1	JD010102YP (COAXIAL)	NB0140S8
H721	KS890519-01, COIL	OC0400D7
SW1	OO220859, SLID S/W	SS0320T8
R721	R, CARBON 1/6W 75 5%	RC7503J2
C721	C, CERAMIC 50V 0.02μF	QC1037Z1
CP721	CONNECTOR 180mm SHIELD	WL0040D1

©Copyright 1991 CARVER CORPORATION
ALL RIGHTS RESERVED

PRINTED IN KOREA

P/N 990-20105-01